

Specifications

Bore size(mm)		32	40	50	63	80	100
Acting type		Double acting					
Fluid		Air(to be filtered by 40μm filter element)					
Mounting type	SC	Basic FA FB CA CB LB TC TCM1					
	SCD, SCJ	Basic FA LB TC TCM1					
Operating pressure		0.15~1.0MPa(22~145psi)(1.5~10.0bar)					
Proof pressure		1.5MPa(215psi)(15bar)					
Temperature ℃		-20~70					
Speed range mm/s		30~800					
Stroke tolerance		$0\sim250^{+1.0}_{0}$ $251\sim1000^{+1.5}_{0}$ $1001\text{-}1500^{+2.0}_{0}$					
Cushion type		Variable cushion					
Adjustable cushion stroke		21				28	29
Port size [Note 1]		1/8"	1/4"		3/8"		1/2"

[Note 1] PT thread, G thread and NPT thread are available.

Symbol

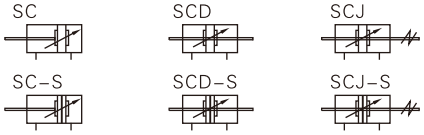

Stroke

Bore size (mm)	Standard stroke (mm)	Max.std stroke	Max. stroke
32	25 50 75 80 100 125 150 160 175 200 250 300 350 400 450 500	1000	2000
40	25 50 75 80 100 125 150 160 175 200 250 300 350 400 450 500 600 700 800 900 1000	1200	2000
50	25 50 75 80 100 125 150 160 175 200 250 300 350 400 450 500 600 700 800 900 1000	1200	2000
63	25 50 75 80 100 125 150 160 175 200 250 300 350 400 450 500 600 700 800 900 1000	1500	2000
80	25 50 75 80 100 125 150 160 175 200 250 300 350 400 450 500 600 700 800 900 1000	1500	2000
100	25 50 75 80 100 125 150 160 175 200 250 300 350 400 450 500 600 700 800 900 1000	1500	2000

[Note] If the stroke is :: 1600mm within the maximum stroke scope,
it is treated as non-standard one.
Please contact the company for other special strokes.

Product feature

1. Standard cylinder manufactured by our enterprise.
2. The seal of piston adopts heterogeneous two way seal structure. It's dimension is tight and it has the function of grease reservation.
3. It is tie rod cylinder. The cylinder barrel and front/rear cap is jointed by tie rods with high reliability.
4. Compared with ISO15552 standard cylinder, SC series cylinder with the same bore size is shorter.
5. The buffer adjustment of cylinder is smooth and steady.
6. Cylinders and mounting accessories with several specifications are optional.
7. The seal material with high temperature resistance is sdopted to guarantee the normal operation of cylinder at 150℃.

Ordering code

SC 50 × 50 S + + +
SCD 50 × 50 S + + +
SCJ 50 × 50 - 20 S + + +

Model

SC	Double acting type
SCD	Double rod type
SCJ	Adjustable stroke type

Bore size

32
40
50
63
80
100

Stroke

Refer to stroke table for details

Adjustable stroke

10	10mm
20	20mm
30	30mm
40	40mm
50	50mm
75	75mm
100	100mm

Magnet

Blank	Without magnet
S	With magnet

Mounting type [Note1]

	Mounting type	Available series	Memo
Blank	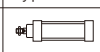	SC SCD SCJ	
LB	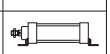		
FA	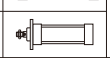		
FB	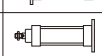	SC	
CA	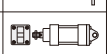		
CB	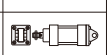		
TC	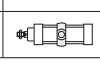	SC, SCD SCJ	Be used with TCM1

Seals material

Blank	TPU
H	Viton
N	NBR

Thread type

Blank	PT
G	G
T	NPT

[Note 1] The accessories are the same as SU series.

Inner structure and material of major parts

SC

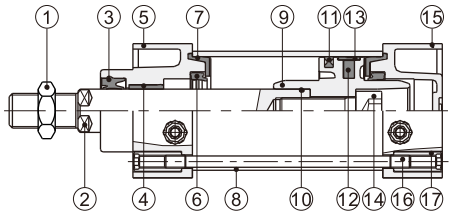

No.	Item	Material
1	Rod nut	Carbon steel
2	Piston rod	Carbon steel with 20μm chrome plated
3	Front cover packing	TPU
4	Bushing	Wear resistant material
5	Front cover	Aluminum alloy
6	Cushing O-ring	NBR
7	Cushion gasket	TPU
8	Barrel	Aluminum alloy
9	Piston	Aluminum alloy
10	Piston rod O-ring	NBR
11	Piston seal	NBR
12	Magnet	Plastic
13	Wear ring	Wear resistant material
14	Bolt	Carbon steel
15	Back cover	Aluminum alloy
16	Tie-rod	Carbon steel
17	Tie-rod nut	Carbon steel

Dimensions

AL

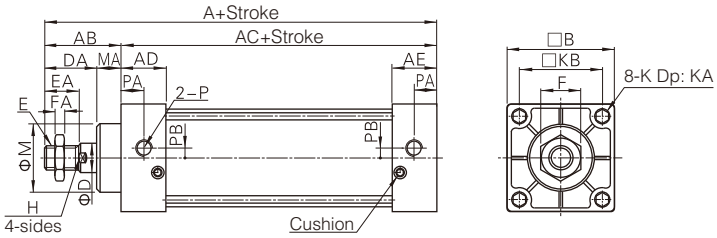

Bore size\Item	A	AB	AC	AD	AE	B	D	DA	E	EA	F	FA	H	K	KA	KB	M	MA	P	PA	PB
32	140	47	93	27.5	27.5	45	12	32	M10×1.25	22	17	6	10	M6×1.25	14.5	33	28	15	1/8"	14	5.5
40	142	49	93	27.5	27.5	50	16	34	M12×1.25	24	17	7	14	M6×1.25	14.5	37	32	15	1/4"	15	6
50	150	57	93	27.5	27.5	62	20	42	M16×1.5	32	23	8	17	M6×1.5	14.5	47	38	15	1/4"	17	8.5
63	153	57	96	27.5	27.5	75	20	42	M16×1.5	32	23	8	17	M8×1.5	14.5	56	38	15	3/8"	15	9.5
80	182	75	107	33	33	94	25	54	M20×1.5	40	26	10	22	M10×1.5	17	70	47	21	3/8"	19.5	10
100	188	75	113	33	33	112	25	54	M20×1.5	40	26	10	22	M10×1.5	17	84	47	21	1/2"	19.5	11

Remark: The dimensions of magnet type cylinder are the same as non-magnet type cylinder.

SCD

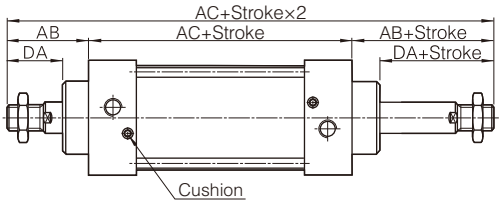

SCJ

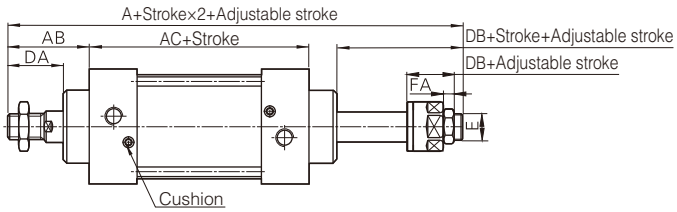

Bore size\Item	A(SCD)	A(SCJ)	AB	AC	DA	DB	E	FA
32	187	182	47	93	32	27	M10×1.25	6
40	191	185	49	93	34	28	M12×1.25	7
50	207	194	57	93	42	29	M16×1.5	8
63	210	197	57	96	42	29	M16×1.5	8
80	257	238.5	75	107	54	35.5	M20×1.5	10
100	263	244.5	75	113	54	35.5	M20×1.5	10

Remark:
1. The dimensions of magnet type cylinder are the same as non-magnet type cylinder.
2. The unmarked dimension is the same as SC standard type.



Specifications

Bore size(mm)		125	160	200	250
Acting type		Double acting			
Fluid		Air(to be filtered by 40μm filter element)			
Mounting type	SC	Basic FA FB CA CB LB TC TCM1			
	SCD, SCJ	Basic FA LB TC TCM1			
Operating pressure		0.15~1.0MPa(22~145psi)(1.5~10.0bar)			
Proof pressure		1.5MPa(215psi)(15bar)			
Temperature ℃		-20~70			
Speed range mm/s		30~800			
Stroke tolerance		$0\sim250^{+1.0}_{0}$	$251\sim1000^{+1.5}_{0}$	$1001\text{-}1500^{+2.0}_{0}$	
Cushion type		Variable cushion			
Adjustable cushion stroke		28	29	33	40
Port size [Note 1]		1/2"	3/4"		1"

[Note 1] PT thread, G thread and NPT thread are available.

Symbol

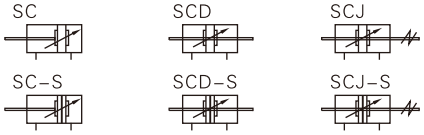

Product feature

1. ISO6430 standard cylinder.
2. The seal of piston adopts heterogeneous two way seal structure. It's dimension is tight and it has the function of grease reservation.
3. It is tie rod cylinder. The cylinder barrel and front/rear cap is jointed by tie rods with high reliability.
4. Compared with ISO15552 standard cylinder, SC series cylinder with the same bore size is shorter.
5. The buffer adjustment of cylinder is smooth and steady.
6. Cylinders and mounting accessories with several specifications are optional.
7. The seal material with high temperature resistance is sdopted to guarantee the normal operation of cylinder at 150℃.

Stroke

Bore size (mm)	Standard stroke (mm)	Max.std stroke	Max. stroke
125	25 50 75 80 100 125 150 160 175 200 250 300 350 400 450 500 600 700 800 900 1000	1500	2000
160	25 50 75 80 100 125 150 160 175 200 250 300 350 400 450 500 600 700 800 900 1000	1500	2000
200	25 50 75 80 100 125 150 160 175 200 250 300 350 400 450 500 600 700 800 900 1000	1500	2000
250	25 50 75 80 100 125 150 160 175 200 250 300 350 400 450 500 600 700 800 900 1000	1500	2000

[Note] If the stroke is ∷ 1600mm within the maximum stroke scope, it is treated as non-standard one.
Please contact the company for other special strokes.

Ordering code

SC	200	×	500			S	+		+		+	+
SCD	200	×	500			S	+		+		+	+
SCJ	200	×	500	-	50	S	+		+		+	+

Model

SC	Double acting type
SCD	Double rod type
SCJ	Adjustable stroke type

Bore size

125
160
200
250

Stroke

Refer to stroke table for details

Adjustable stroke

10	10mm
20	20mm
30	30mm
40	40mm
50	50mm
75	75mm
100	100mm

Magnet

Blank	Without magnet
S	With magnet

Mounting type [Note1]

	Mounting type	Available series	Memo
Blank		SC SCD SCJ	
LB			
FA			
FB		SC	
CA	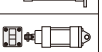		
CB	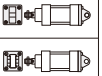		
TC		SC, SCD SCJ	Be used with TCM1

Seals material

Blank	TPU
H	Viton

Thread type

Blank	PT
G	G
T	NPT

[Note 1] The accessories are the same as SU series.

Inner structure and material of major parts

SC

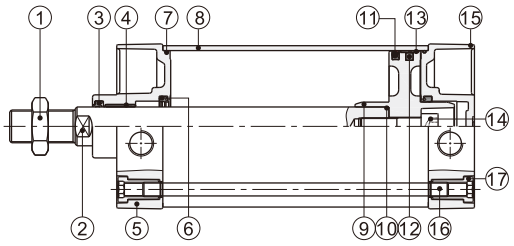

No.	Item	Material
1	Rod nut	Carbon steel
2	Piston rod	Carbon steel with 20μm chrome plated
3	Front cover packing	TPU
4	Bushing	Wear resistant material
5	Front cover	Aluminum alloy
6	Cushing O-ring	TPU
7	O-ring	NBR
8	Barrel	Aluminum alloy
9	Piston	Aluminum alloy
10	Piston rod O-ring	NBR
11	Piston seal	NBR
12	Magnet	Plastic
13	Wear ring	Wear resistant material
14	Bolt	Carbon steel
15	Back cover	Aluminum alloy
16	Tie-rod	Carbon steel
17	Tie-rod nut	Carbon steel

Dimensions

AL

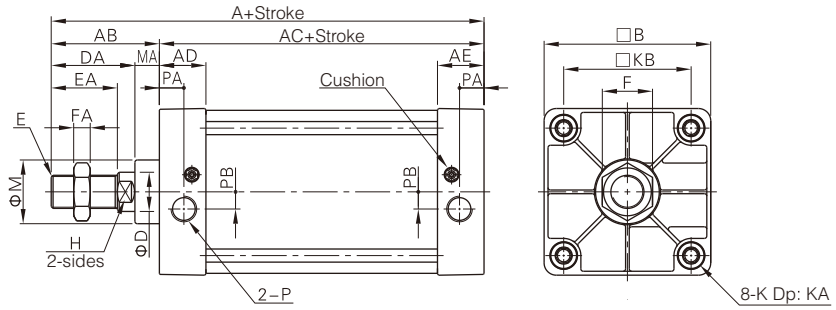

Bore size\Item	A	AB	AC	AD	AE	B	D	DA	E	EA	F	FA	H	K	KA	KB	M	MA	P	PA	PB
125	203	88	115	38	38	136	32	68	M20×2.0	54	41	13.5	27	M12×1.75	21	104	52	20	1/2"	20	14
160	239	113	126	38	38	174	40	88	M20×2.0	72	55	18	36	M16×2.0	21	134	62	25	3/4"	20	15
200	244	118	126	38	38	214	40	88	M20×2.0	72	55	18	36	M16×2.0	21	163	62	30	3/4"	20	15
250	294	141	153	48	48	267	50	106	M20×2.0	84	65	21	46	M20×2.0	26	202	86	35	1"	25.5	22

Remark: The dimensions of magnet type cylinder are the same as non-magnet type cylinder.

SCD

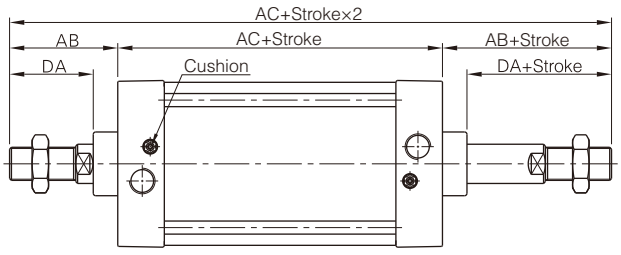

SCJ

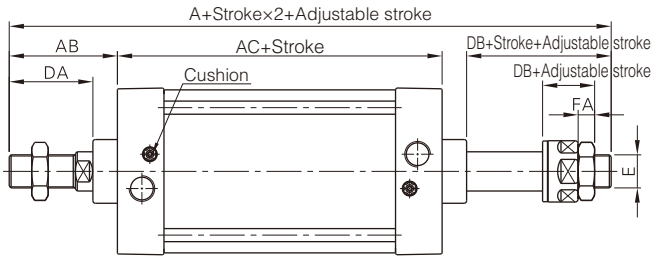

Bore size\Item	A(SCD)	A(SCJ)	AB	AC	DA	DB	E	FA
125	291	265.5	88	115	68	42.5	M27×2.0	13.5
160	352	332	113	126	88	68	M36×2.0	18
200	362	342	118	126	88	68	M36×2.0	18
250	435	409	141	153	106	80	M42×2.0	21

Remark:
1. The dimensions of magnet type cylinder are the same as non-magnet type cylinder.
2. The unmarked dimension is the same as SC standard type.



Specifications

Bore size(mm)	32	40	50	63	80	100
Acting type	Double acting					
Fluid	Air(to be filtered by 40μm filter element)					
Mounting type	Basic FA FB CA CB LB TC TCM1					
Operating pressure	0.15~1.0MPa(22~145psi)(1.5~10.0bar)					
Proof pressure	1.5MPa(215psi)(15bar)					
Temperature ℃	-20~70					
Speed range mm/s	30~800					
Stroke tolerance	$0\sim250^{+1.0}_{0}$		$251\sim1000^{+1.5}_{0}$		$1001\text{-}1500^{+2.0}_{0}$	
Cushion type	Variable cushion					
Adjustable cushion stroke	21				28	29
Port size [Note 1]	1/8"	1/4"		3/8"		1/2"

[Note 1] PT thread, G thread and NPT thread are available.

Symbol

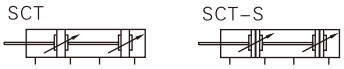

Product feature

1. Standard cylinder manufactured by our enterprise.
2. The seal of piston adopts heterogeneous two way seal structure. It's dimension is tight and it has the function of grease reservation.
3. It is tie rod cylinder. The cylinder barrel and front/rear cap is jointed by tie rods with high reliability.
4. Piston rod can be positioned in several positions in the whole action process.

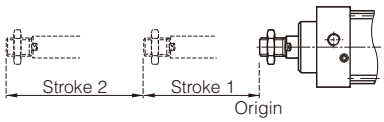

5. The buffer adjustment of cylinder is smooth and steady.
6. Cylinders and mounting accessories with several specifications are optional.
7. The seal material with high temperature resistance is sdopted to guarantee the normal operation of cylinder at 150℃.

Stroke

Bore size (mm)	Standard stroke (mm)	Max.std stroke	Max. stroke
32	25 50 75 80 100 125 150 160 175 200 250 300 350 400 450 500	500	800
40	25 50 75 80 100 125 150 160 175 200 250 300 350 400 450 500	500	800
50	25 50 75 80 100 125 150 160 175 200 250 300 350 400 450 500	500	800
63	25 50 75 80 100 125 150 160 175 200 250 300 350 400 450 500	500	800
80	25 50 75 80 100 125 150 160 175 200 250 300 350 400 450 500	500	800
100	25 50 75 80 100 125 150 160 175 200 250 300 350 400 450 500	500	800

[Note] If the stroke is ∷800mm within the maximum stroke scope, it is treated as non-standard one.
Please contact the company for other special strokes.

Ordering code

SCT — **Model**

SCT	Double acting Multi-position type

50 × **50** × **50**

Bore size

32
40
50
63
80
100

Stroke 1: Refer to stroke table for details

Stroke 2: Refer to stroke table for details

S — **Magnet**

Blank	Without magnet
S	With magnet

+ **Mounting type** [Note1]

Blank	
LB	
FA	
FB	
CA	
CB	
TC	

+ **Seals material**

Blank	TPU
H	Viton
N	NBR

+ **Thread type**

Blank	PT
G	G
T	NPT

[Note 1] TC is used with TCM1.

Inner structure and material of major parts

SCT

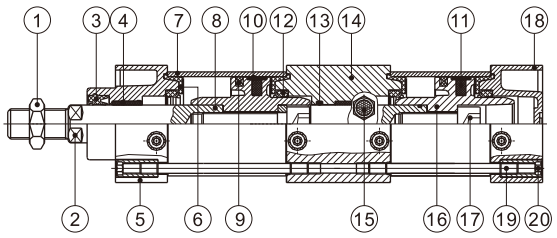

No.	Item	Material
1	Rod nut	Carbon steel
2	Piston rod	Carbon steel with 20μm chrome plated
3	packing	TPU
4	Bushing	Wear resistant material
5	Front cover	Aluminum alloy
6	Cushing O-ring	TPU
7	Barrel	Aluminum alloy
8	Rod O-ring	NBR
9	Piston seal	NBR
10	Wear ring	Wear resistant material
11	Magnet	Plastic
12	Gasket	NBR
13	O-ring	NBR
14	Joint seat	Aluminum alloy
15	Silencer	
16	Piaton	Aluminum alloy
17	Bolt	Carbon steel
18	Back cover	Aluminum alloy
19	Tie-rod	Carbon steel
20	Tie-rod nut	Carbon steel

Dimensions

SCT

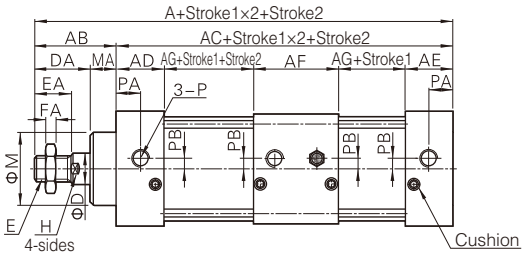

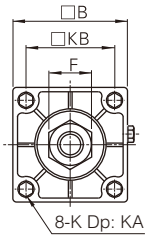

Bore size\Item	A	AB	AC	AD	AE	AF	AG	B	D	DA	E	EA	F	FA	H	K	KA	KB	M	MA	P	PA	PB
32	233	47	186	27.5	27.5	55	38	45	12	32	M10×1.25	22	17	6	10	M6×1.0	14.5	33	28	15	1/8"	14	5.5
40	235	49	186	27.5	27.5	55	38	50	16	34	M12×1.25	24	17	7	14	M6×1.0	14.5	37	32	15	1/4"	15	6
50	243	57	186	27.5	27.5	55	38	62	20	42	M16×1.5	32	23	8	17	M6×1.0	14.5	47	38	15	1/4"	17	8.5
63	249	57	192	27.5	27.5	55	41	75	20	42	M16×1.5	32	23	8	17	M8×1.25	14.5	56	38	15	3/8"	15	9.5
80	296	75	221	33	33	73	41	94	25	54	M20×1.5	40	26	10	22	M10×1.5	17	70	47	21	3/8"	19.5	10
100	308	75	233	33	33	73	47	112	25	54	M20×1.5	40	26	10	22	M10×1.5	17	84	47	21	1/2"	16.5	11

Remark: The dimensions of magnet type cylinder are the same as non-magnet type cylinder.



Symbol

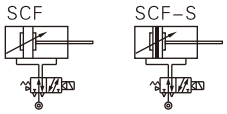

Product feature

1. For Standard Cylinders: use 4M210 valve for bore size 32, 40 & 50; 4M310 valve for bore size 63, 80 & 100mm.
2. Individually control, no need for extra solenoid valves.
3. Insrallation time & space saving; suitable for decentralize installation in large system.
4. Options of mounting accessories & easy installation.

Stroke

Bore size (mm)		Standard stroke (mm)	Mini. stroke	Max. std	Max. stroke
32	Standard type	50 75 80 100 125 150 160 175 200 250 300 350 400 450 500	50	1000	2000
	With TC type	100 125 150 160 175 200 250 300 350 400 450 500	100		
40 50	Standard type	50 75 80 100 125 150 160 175 200 250 300 350 400 450 500 600 700 800 900 1000	50	1200	2000
	With TC type	100 125 150 160 175 200 250 300 350 400 450 500 600 700 800 900 1000	100		
63 80 100	Standard type	75 80 100 125 150 160 175 200 250 300 350 400 450 500 600 700 800 900 1000	75	1500	2000
	With TC type	125 150 160 175 200 250 300 350 400 450 500 600 700 800 900 1000	125		

[Note] Consult us for non-standard stroke.

Specifications

Cylinder specification						
Bore size(mm)	32	40	50	63	80	100
Acting type	Double acting					
Fluid	Air(to be filtered by 40μm filter element)					
Mounting type	Basic FA FB CA CB LB TC TCM1					
Operating pressure	0.1~1.0MPa(15~145psi)(1.0~10.0bar)					
Proof pressure	1.5MPa(215psi)(15bar)					
Temperature ℃	-20~70					
Speed range mm/s	30~800					
Stroke tolerance	$0\sim250^{+1.0}_{0}$ $251\sim1000^{+1.5}_{0}$ $1001\text{-}1500^{+2.0}_{0}$					
Cushion type	Variable cushion					
Adjustable cushion stroke	21				28	29
Port size	1/8"	1/4"		3/8"		1/2"
PU tube size(ODXID)	Φ8×Φ5				Φ10×Φ6.5	
Solenoid valve specification						
Model	4M210-06 & 4M210-08			4M310-08 & 4M310-10		
Fluid	Air(to be filtered by 40μm filter element)					
Acting type	Internal piloted					
Port size [Note 1]	In=Exhaust=1/8" & In=1/4" Exhaust=1/8"			In=Exhaust=1/4" & In=PT3/8 Exhaust=1/4"		
Orifice size	4M210-06: 14.0mm²(Cv=0.78) 4M210-08: 16.0mm²(Cv=0.89)			4M310-08: 25.0mm²(Cv=1.40) 4M310-10: 30.0mm²(Cv=1.68)		
Valve type	5 port 2 position					
Operating pressure	0.15~0.8MPa(21~114psi)					
Proof pressure	1.5MPa(215psi)					
Temperature	-20~70					
Body material	Aluminum alloy					
Lubrication [Note 2]	Not requined					
Max. frequency [Note 3]	5 cycle/sec			4 cycle/sec		
Coil specification						
Standard voltage	AC220V AC110V AC24V DC24V DC12V					
Scope voltage	AC: ±15% DC: ±10%					
Power consumption	AC: 3.5VA DC: 3.0W					
Protection	IP65(DIN40050)					
Temperature classification	B Class					
Electrical entry	Terminal, Grommet					
Activating time	0.05 sec and below					

[Note 1] PT thread, G thread and NPT thread are available.
[Note 2] It cann't stop in the midway of lubricating. Lubricants like ISO VG32 or equivalent are recommended.
[Note 3] The maximum actuation frequency is in the no-load state.

Ordering code

SCF — **50** × **1000** — **S** — + **Mounting type** [Note1] - **06** — **A** — + **Electrical entry** — + **Thread type**

Model	
SCF	Double acting with valve type

Bore size
32
40
50
63
80
100

Stroke
Refer to stroke table for details

Magnet	
Blank	Without magnet
S	With magnet

Mounting type [Note1]	
Blank	
LB	
FA	
FB	
CA	
CB	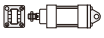
TC	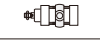

Pirt size	
06	1/8"
08	1/4"
10	3/8"

Voltage	
A	AC220V
B	DC24V
C	AC110V
E	AC24V
F	DC12V

Electrical entry	
Blank	Terminal
I	Grommet

Thread type	
Blank	PT
G	G
T	NPT

[Note 1] TC is used with TCM1.

Inner structure

SCT

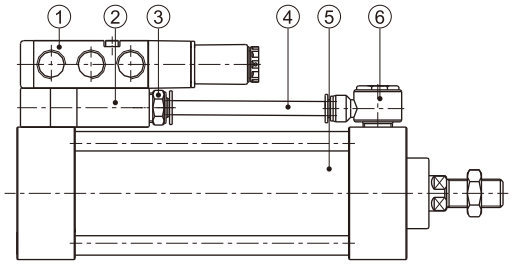

No.	Item
1	4M series solenoid valve
2	Unite block
3	APC series tube connector
4	PU tube
5	SC series cylinder
6	APH series tube connector

Dimensions

Pull when energized

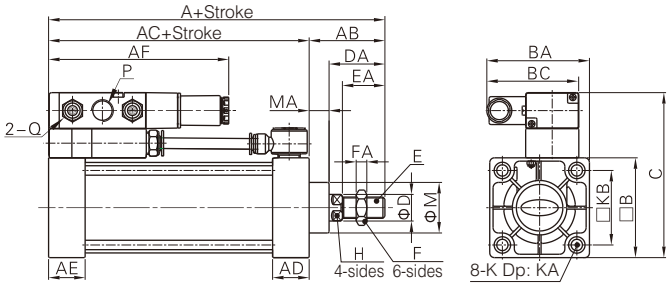

Bore size\Item	A	AB	AC	AD	AE	AF	AG	B	BA	BC	BD
32	140	47	93	27.5	27.5	118	53	45	67	67	77
40	142	49	93	27.5	27.5	118	53	50	68.5	67	80.5
50	150	57	93	27.5	27.5	120	51	62	72	67	89
63	153	57	96	27.5	27.5	135.5	54.5	75	77.5	69.5	96.5
80	182	75	107	33	33	137	53	94	86.5	69.5	106.5
100	188	75	113	33	33	135.5	54.5	112	96	69.5	115

Bore size\Item	C	CB	D	DA	E	EA	F	FA	M	MA
32	89	67	12	32	M10×1.25	22	17	6	28	15
40	94	72	16	34	M12×1.25	24	17	7	32	15
50	106	84	20	42	M16×1.5	32	23	8	38	15
63	124	97	20	42	M16×1.5	32	23	8	38	15
80	143	116	25	54	M20×1.5	40	26	10	47	21
100	161	134	25	54	M20×1.5	40	26	10	47	21

Push when energized

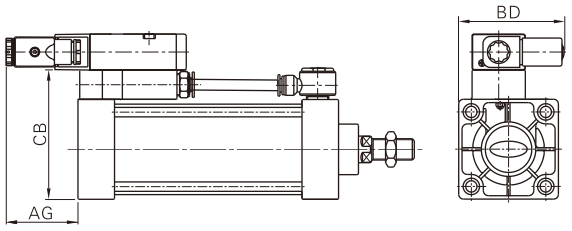

Bore size\Item	Compatible valve's type	P	Q	K	KA	KB	H
32	4M210-06	1/8"	1/8"	M6×1	14.5	33	10
	4M210-08	1/4"					
40	4M210-06	1/8"	1/8"	M6×1	14.5	37	14
	4M210-08	1/4"					
50	4M210-06	1/8"	1/8"	M6×1	14.5	47	17
	4M210-08	1/4"					
63	4M310-08	1/4"	1/4"	M8×1.25	14.5	56	17
	4M310-10	3/8"					
80	4M310-08	1/4"	1/4"	M10×1.5	17	70	22
	4M310-10	3/8"					
100	4M310-08	1/4"	1/4"	M10×1.5	17	84	22
	4M310-10	3/8"					

Remark: The dimensions of magnet type cylinder are the same as non-magnet type cylinder.

How to use

1. Options for piston rod to retract or extend when solenoid coil is energized.
2. Default factory setting will be piston rod to retract when energized(see Drawing one). Should you require piston rod to extend when energized, reposition the solenoid valve as shown in Drawing two.

Drawing one

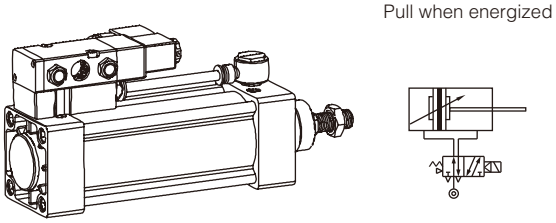

Drawing two

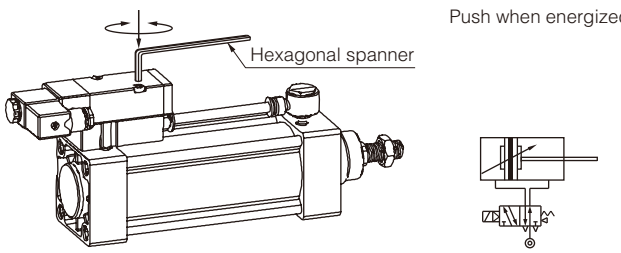

Attention

Ensure that the seals between the mounting block & valve are placed correctly when repositioning the valve.

List for ordering code of accessories

Accessories / Bore size	Mounting accessories						Knuckle				Sensor switch	
	LB	FA\FB	CA	CB	TC	TCM1	I: I Knuckle	Y: Y Knuckle	F: F Knuckle	U: U Knuckle	CMSG	DMSG(S)
32	F-SC32LB	F-SC32FA	F-SC32CA	F-SC32CB	F-SC32TC	F-SI40TCM1	F-M10×125I	F-M10×125Y	F-M10×125F	F-M10×125U		
40	F-SC40LB	F-SC40FA	F-SC40CA	F-SC40CB	F-SC40TC	F-SC40TCM1	F-M12×125I	F-M12×125Y	F-M12×125F	F-M12×125U		
50	F-SC50LB	F-SC50FA	F-SC50CA	F-SC50CB	F-SC50TC	F-SC40TCM1	F-M16×150I	F-M16×150Y	F-M16×150F	F-M16×150U		
63	F-SC63LB	F-SC63FA	F-SC63CA	F-SC63CB	F-SC63TC	F-SC40TCM1	F-M16×150I	F-M16×150Y	F-M16×150F	F-M16×150U		
80	F-SC80LB	F-SC80FA	F-SC80CA	F-SC80CB	F-SC80TC	F-SC80TCM1	F-M20×150I	F-M20×150Y	F-M20×150F	F-M20×150U		
100	F-SC100LB	F-SC100FA	F-SC100CA	F-SC100CB	F-SC100TC	F-SC80TCM1	F-M20×150I	F-M20×150Y	F-M20×150F	F-M20×150U	CMSG	DMSG(S)
125	F-SC125LB	F-SC125FA	F-SC125CA	F-SC125CB	F-SC125TC	F-SC125TCM1	F-M27×200I	F-M27×200Y	F-M27×200F	F-M27×200U		
160	F-SC160LB	F-SC160FA	F-SC160CA	F-SC160CB	F-SC160TC	F-SC160TCM1	F-M36×200I	F-M36×200Y	F-M36×200F	F-M36×200U		
200	F-SC200LB	F-SC200FA	F-SC200CA	F-SC200CB	F-SC200TC	F-SC160TCM1	F-M36×200I	F-M36×200Y	F-M36×200F	F-M36×200U		
250	F-SC250LB	F-SC250FA	F-SC250CA	F-SC250CB	F-SC250TC	F-SC250TCM1	F-M42×200Y	F-M42×200Y	-	-		

Accessory selection

Cylinder model / Accessories		Mounting accessories							Knuckle				Sensor switch	
		LB	FA	FB	CA	CB	TC	TCM1	I	Y	F	U	CMSG	DMSG(S)
SC	Standard	+	+	+	+	+	+	+	+	+	+	+	°	°
	With magnet	+	+	+	+	+	+	+	+	+	+	+	+	+
BSC	Standard	+	+	+	+	+	+	+	+	+	+	+	°	°
	With magnet	+	+	+	+	+	+	+	+	+	+	+	+	+
SCD	Standard	+	+	°	°	°	+	+	+	+	+	+	°	°
	With magnet	+	+	°	°	°	+	+	+	+	+	+	+	+
BSCD	Standard	+	+	°	°	°	+	+	+	+	+	+	°	°
	With magnet	+	+	°	°	°	+	+	+	+	+	+	+	+
SCJ	Standard	+	+	°	°	°	+	+	+	+	+	+	°	°
	With magnet	+	+	°	°	°	+	+	+	+	+	+	+	+
SCT	Standard	+	+	+	+	+	+	+	+	+	+	+	°	°
	With magnet	+	+	+	+	+	+	+	+	+	+	+	+	+
SCL	Standard	+	+	+	+	+	+	+	+	+	+	+	°	°
	With magnet	+	+	+	+	+	+	+	+	+	+	+	+	+
SCF	Standard	+	+	+	+	+	+	+	+	+	+	+	°	°
	With magnet	+	+	+	+	+	+	+	+	+	+	+	+	+

Material of accessories

Accessories / Bore size	Mounting accessories							Knuckle			
	LB	FA	FB	CA	CB	TC	TCM1	I	Y	F	U
32~100	□	●	●	◇	◇	◇	◇	□	□	□	□
125~200	◇	◇	◇	◇	◇	◇	◇	□	□	–	–
250	◇	■	■	◇	◇	◇	◇	■	■	–	–

●—Aluminum alloy, ■—Cast steel, ◇—Nodular cast iron, □—Carbon steel.

Dimensions

LB

Φ32~Φ100

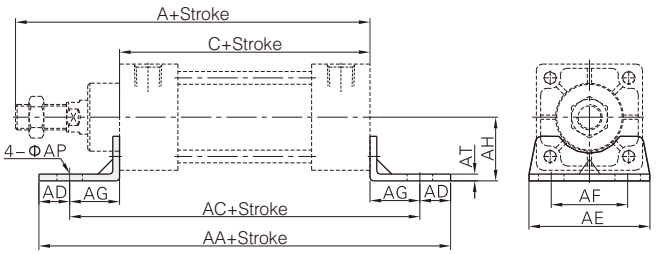

Φ125~Φ250

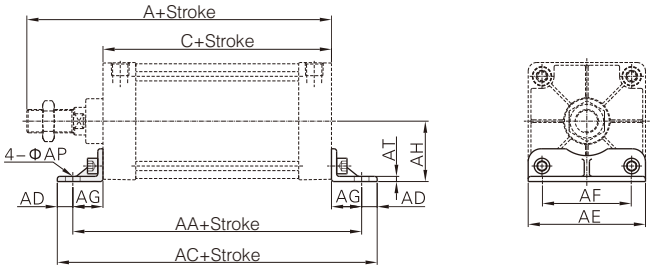

Bore size\Item	A	C	AA	AC	AD	AE	AF	AG	AH	AP	AT
32	140	93	153	134	9.5	50	33	20.5	28	9	3
40	142	93	169	140	14.5	57	36	23.5	30	12	3
50	150	93	173	149	12	68	47	28	36.5	12	3
63	153	96	184	158	13	80	56	31	41	12	3
80	182	107	199	167	16	97	70	30	49	14	4
100	188	113	209	173	18	112	84	30	57	14	4
125	203	115	221	185	18	136	104	35	70	17	6
160	239	126	246	206	20	174	134	40	91	17	8
200	244	126	276	226	25	214	163	50	113.5	22	9
250	294	153	323	273	25	267	201	60	141	26	15

CA

Φ32~Φ100

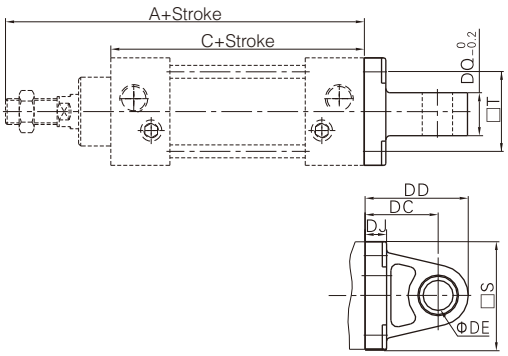

Φ125~Φ250

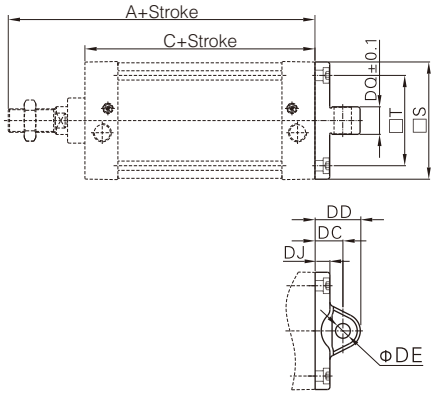

Bore size\Item	A	C	DC	DD	DE	DJ	DQ	S	T
32	140	93	34	44.5	12	9	16	45	33
40	142	93	34	45.5	14	9	20	49	37
50	150	93	34	46	14	10	20	61	47
63	153	96	34	46.5	14	10	20	74	56
80	182	107	48	64.5	20	14	32	93	70
100	188	113	48	65	20	14	32	111	84
125	203	115	32	52	20	17	31.7	135	104
160	239	126	40	68	28	19.5	39.7	173	134
200	244	126	60	90	28	23	39.7	213	163
250	294	153	70	106	36	24	49.7	255	202

Dimensions

FA/FB

Φ32~Φ100

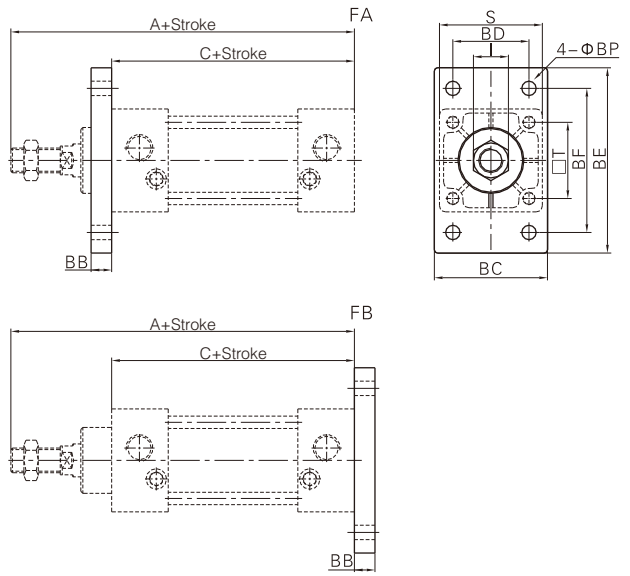

Φ125~Φ250

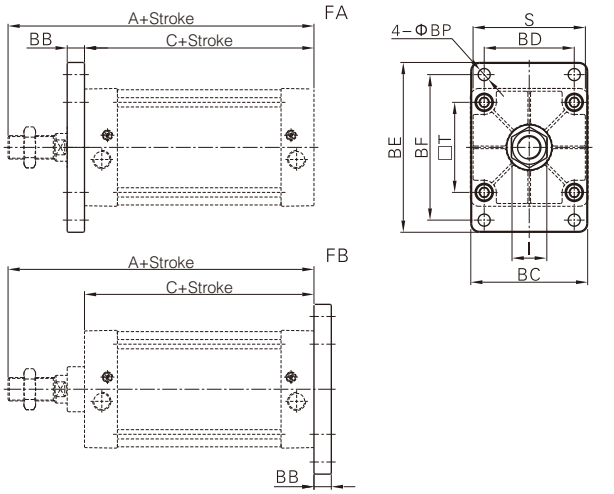

CB

Φ32~Φ100

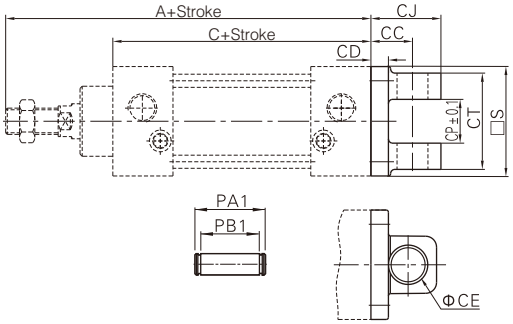

Φ125~Φ250

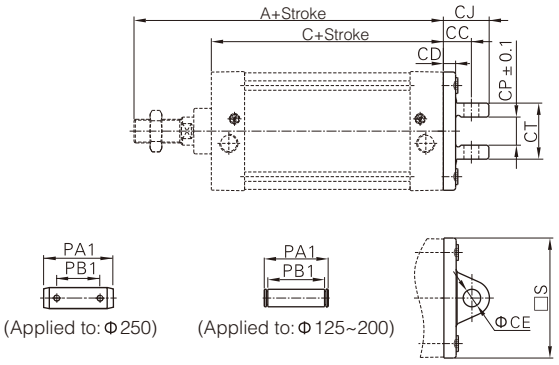

Bore size\Item	A	C	BB	BC	BD	BE	BF	BP	I	S	T
32	140	93	10	47	33	80	58	7	17	45	33
40	142	93	10	53	36	90	70	7	17	50	37
50	150	93	10	65	47	104	86	9	23	62	47
63	153	96	12	75	56	118	98	9	23	75	56
80	182	107	16	95	70	140	119	11	26	94	70
100	188	113	16	115	84	160	138	11	26	112	84
125	203	115	20	135	104	196	168	14	41	136	104
160	239	126	20	173	134	248	212	18	55	174	134
200	244	126	25	213	163	286	250	18	55	214	163
250	294	153	25	255	201	356	312	22	65	267	202

Bore size\Item	A	C	S	CC	CD	CE	CJ	CP	CT	PA1	PB1
32	140	93	45	19	9	12	29.5	16.3	32	39	32.8
40	142	93	49	19	9	14	30.5	20.3	44	51	44.8
50	150	93	61	19	10	14	31	20.3	52	59	52.8
63	153	96	74	19	10	14	31.5	20.3	52	59	52.8
80	182	107	93	32	14	20	48.5	32.3	64	73	64.8
100	188	113	111	32	14	20	49	32.3	64	73	64.8
125	203	115	135	32	14	20	52	32.1	64	73	64.8
160	239	126	173	40	15	28	68	40.1	80	90.2	80.8
200	244	126	213	60	23	28	90	40.1	80	90.2	80.8
250	294	153	255	70	24	36	106	50.1	100	130	108

Dimensions

FA/FB

Φ32~Φ100

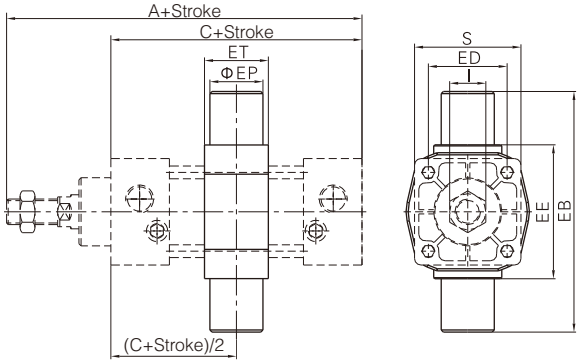

CB

Φ32~Φ100

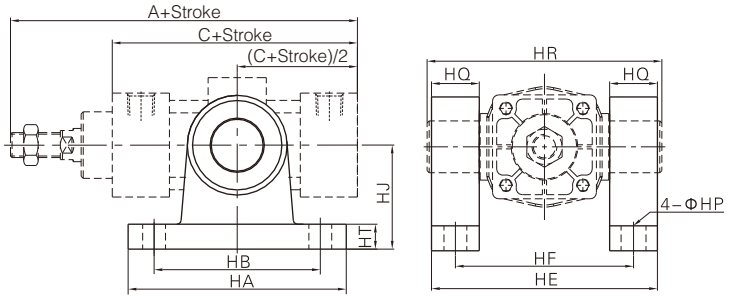

Φ125~Φ250

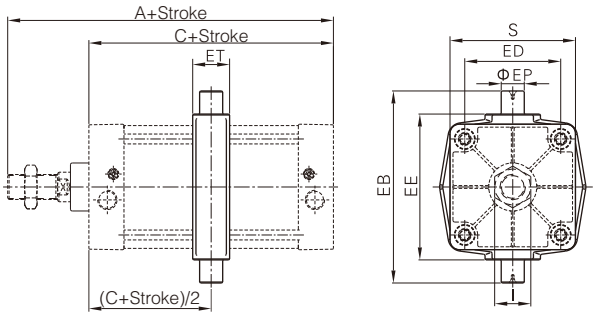

Φ125~Φ250

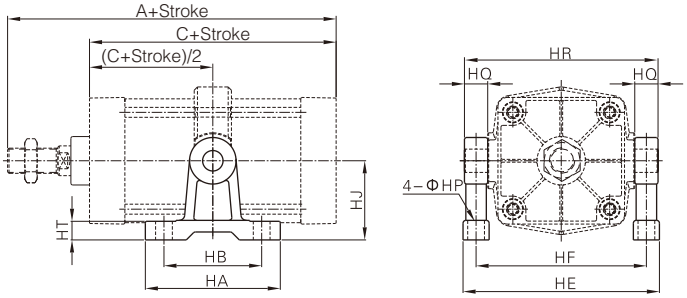

Bore size\Item	A	C	EB	ED	EE	EP	ET	I	S
32	140	93	87	33	55	16	22	17	45
40	142	93	113	37	63	25	28	17	50
50	150	93	126	47	73	25	28	23	62
63	153	96	138	56	88	25	30	23	75
80	182	107	164	70	114	25	32	26	94
100	188	113	182	84	132	25	38	26	112
125	203	115	208	104	158	25	40	41	136
160	239	126	272	134	200	36	46	55	174
200	244	126	319	163	246	36	46	55	214
250	294	153	394	202	304	45	56	65	267

[Note] The installation position of the accessories can not be adjusted arbitrarily.

Bore size\Item	A	C	HA	HB	HE	HF	HP	HQ	HR	HT	HJ
32	140	93	100	75	90	71	12	16	87	11	54
40	142	93	103	80	109	86	11	23	113	12	50
50	150	93	103	80	122	99	11	23	126	12	50
63	153	96	103	80	134	111	11	23	138	12	50
80	182	107	110	85	160	137	13	23	164	12	70
100	188	113	110	85	178	155	13	23	182	12	70
125	203	115	145	105	211	183	18	25	208	20	85
160	239	126	185	140	272	236	22	36	272	25	130
200	244	126	185	140	318	282	22	36	318	25	130
250	294	153	215	165	394	349	26	45	394	28	160

[Note] The installation position of the accessories can not be adjusted arbitrarily.



Specifications

Bore size(mm)		32	40	50	63	80	100	125	160	200	250	320
Acting type		Double acting										
Fluid		Air(to be filtered by 40μm filter element)										
Mounting type	SU	Basic FA FB CA CB LB TC TCM1										
	SUD, SUJ	Basic FA LB TC TCM1										
Operating pressure		0.1~1.0MPa(15~145psi)(1.0~10.0bar)										
Proof pressure		1.5MPa(215psi)(15bar)										
Temperature ℃		-20~80										
Speed range mm/s		30~800										
Stroke tolerance		$0\sim250^{+1.0}_{0}$ $251\sim1000^{+1.5}_{0}$ $1001\sim1500^{+2.0}_{0}$										
Cushion type		Variable cushion										
Adjustable cushion stroke		21				28	29					
Port size [Note 1]		1/8"	1/4"		3/8"		1/2"		3/4"		1"	

[Note 1] PT thread, G thread and NPT thread are available.

Symbol

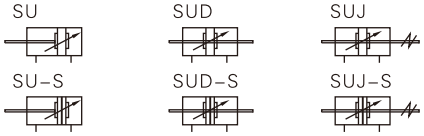

Stroke

Bore size (mm)	Standard stroke (mm)	Max.std stroke	Max. stroke
32	25 50 75 80 100 125 150 160 175 200 250 300 350 400 450 500	1000	1800
40	25 50 75 80 100 125 150 160 175 200 250 300 350 400 450 500 600 700 800 900 1000	1200	1800
50	25 50 75 80 100 125 150 160 175 200 250 300 350 400 450 500 600 700 800 900 1000	1200	1800
63	25 50 75 80 100 125 150 160 175 200 250 300 350 400 450 500 600 700 800 900 1000	1500	1800
80	25 50 75 80 100 125 150 160 175 200 250 300 350 400 450 500 600 700 800 900 1000	1500	1800
100	25 50 75 80 100 125 150 160 175 200 250 300 350 400 450 500 600 700 800 900 1000	1500	1800
125	25 50 75 80 100 125 150 160 175 200 250 300 350 400 450 500 600 700 800 900 1000	1500	1800
160	25 50 75 80 100 125 150 160 175 200 250 300 350 400 450 500 600 700 800 900 1000	1500	1800
200	25 50 75 80 100 125 150 160 175 200 250 300 350 400 450 500 600 700 800 900 1000	1500	1800
250	25 50 75 80 100 125 150 160 175 200 250 300 350 400 450 500 600 700 800 900 1000	1500	1800
320	25 50 75 80 100 125 150 160 175 200 250 300 350 400 450 500 600 700 800 900 1000	1500	1800

[Note] Consult us non-standard stroke.

Product feature

1. Standard cylinder manufactured by our enterprise.
2. The seal of piston adopts heterogeneous two way seal structure. It's dimension is tight and it has the function of oil reservation.
3. It is no tie rod cylinder. The cylinder barrel is "Mickey Mouse" shape, and have good corrosion.
4. Compared with ISO15552 standard cylinder, SU series same bore size is shorter.
5. The buffer adjustment of cylinder is smooth and steady.
6. Mounting accessories are the same as SC series.
7. The seal material with high temperature resistance is adopted to guarantee the normal operation of cylinder at 150℃.

Ordering code

SU / SUD / SUJ **50 × 50** - **20** **S** + + + + + +

Model

SU	Double acting type
SUD	Double rod type
SUJ	Adjustable stroke type

Bore size

32
40
50
63
80
100
125
160
200
250
320

Stroke

Refer to stroke table for details

Adjustable stroke

10	10mm
20	20mm
30	30mm
40	40mm
50	50mm
75	75mm
100	100mm

Magnet

Blank	Without magnet
S	With magnet

Mounting type [Note1]

	Mounting type	Available series	Memo
Blank	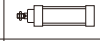	SU SUD SUJ	
LB			
FA			
FB		SU	
CA	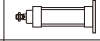		
CB	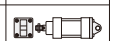		
TC		SU, SUD SUJ	Be used with TCM1

Seals material

Blank	TPU
H	Viton
N	NBR

Thread type

Blank	PT
G	G
T	NPT

Inner structure and material of major parts

SU

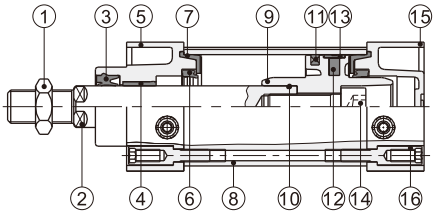

No.	Item	Material	No.	Item	Material
1	Rod nut	Carbon stweel	9	Piston	Aluminum alloy
2	Piston rod	Carbon steel with 20μm chrome plated	10	Piston rod O-ring	NBR
3	Front cover packing	TPU	11	Piston seal	NBR
4	Bushing	Wear resistant material	12	Magnet	Plastic
5	Front cover	Aluminum alloy	13	Wear ring	Wear resistant material
6	Cushing O-ring	NBR	14	Bolt	Carbon steel
7	Cushion gasket	TPU	15	Back cover	Aluminum alloy
8	Barrel	Aluminum alloy	16	Tie-rod nut	Carbon steel

Dimensions

SU

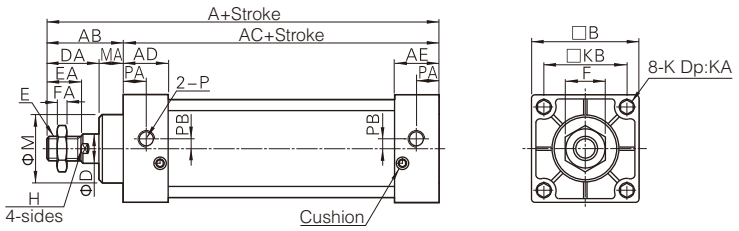

Bore size\Item	A	AB	AC	AD	AE	B	D	DA	E	EA	F	FA	M	MA	H	K(Without TC)	K(With TC)	KA(Without TC)	KA(With TC)	KB	P	PA	PB
32	140	47	93	27.5	27.5	45	12	32	M10×1.25	22	17	6	28	15	10	M6×1.0	M5×0.8	9.5	10	33	1/8"	14	5.5
40	142	49	93	27.5	27.5	50	16	34	M12×1.25	24	17	7	32	15	14	M6×1.0	M5×0.8	9.5	9	37	1/4"	15	6
50	150	57	93	27.5	27.5	62	20	42	M16×1.5	32	23	8	38	15	17	M6×1.0	M5×0.8	9.5	9.5	47	1/4"	17	8.5
63	153	57	96	27.5	27.5	75	20	42	M16×1.5	32	23	8	38	15	17	M8×1.25	M6×1.0	9.5	7.5	56	3/8"	15	9.5
80	182	75	107	33	33	94	25	54	M20×1.5	40	26	10	47	21	22	M10×1.5	M8×1.25	11.5	11	70	3/8"	19.5	10
100	188	75	113	33	33	112	25	54	M20×1.5	40	26	10	47	21	22	M10×1.5	M8×1.25	11.5	11	84	1/2"	16.5	11
125	239	104	136	40	40	140	32	71	M27×2	54	40	12	56	32	28	M12×1.75		21		110	1/2"	16.5	
160	291	121	166	50	50	180	40	92	M36×2	72	50	14	62	60	36	M16×2		25		140	3/4"	26	
200	272	132	130	41	41	220	40	117	M36×2	72	50	16	75	30	36	M16×2		25		175	3/4"	22.5	
250	389	189	200	54	54	270	50	122	M42×2	84	65	21	90	67	46	M20×2				220	1"	31	18.5
320	436	216	220	65	65	350	63	126	M48×2	96	75	24	110	90	55	M24×2				270	1"	31	35

Remark: The dimensions of magnet type cylinder are the same as non-magnet type cylinder.

SUD

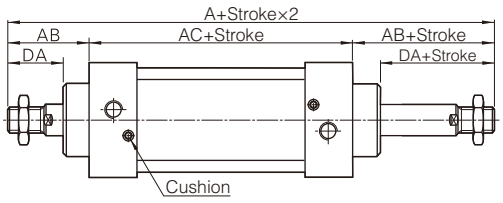

SUJ

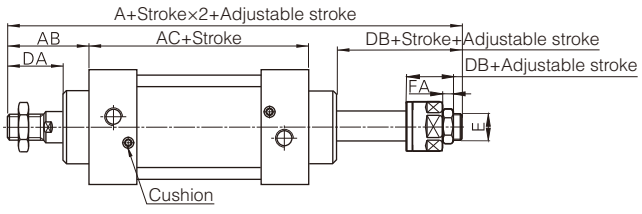

Bore size\Item	A(SUD)	A(SUJ)	AB	AC	DA	DB	E	FA
32	187	182	47	93	32	27	M10×1.25	6
40	191	185	49	93	34	28	M12×1.25	7
50	207	194	57	93	42	29	M16×1.5	8
63	210	197	57	96	42	29	M16×1.5	8
80	257	238.5	75	107	54	35.5	M20×1.5	10
100	263	244.5	75	113	54	35.5	M20×1.5	10
125	330	363	104	136	71		M27×2	12
160	412	450	121	166	92		M36×2	14
200	409	451	132	130	117		M36×2	16
250			189	200	122		M42×2	21
320			216	220	126		M48×2	24

Remark:
1. The dimensions of magnet type cylinder are the same as non-magnet type cylinder;
2. The unmarked dimension is the same as SU standard type.



Symbol

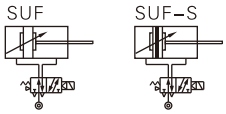

Product feature

1. For Standard Cylinders: use 4M210 valve for bore size 32, 40& 50; 4M310 valve for bore size 63, 80 & 100mm.
2. Indivdually control, no need for extra solenoid valves.
3. Insrallation time & space saving; suitable for decentralize installation in large system.
4. Options of mounting accessories & easy installation.

Stroke

Bore size (mm)		Standard stroke (mm)	Mini. stroke	Max. std	Max. stroke
32	Standard type	50 75 80 100 125 150 160 175 200 250 300 350 400 450 500	50	1000	2000
	With TC type	100 125 150 160 175 200 250 300 350 400 450 500	100		
40 50	Standard type	50 75 80 100 125 150 160 175 200 250 300 350 400 450 500 600 700 800 900 1000	50	1200	2000
	With TC type	100 125 150 160 175 200 250 300 350 400 450 500 600 700 800 900 1000	100		
63 80 100	Standard type	75 80 100 125 150 160 175 200 250 300 350 400 450 500 600 700 800 900 1000	75	1500	2000
	With TC type	125 150 160 175 200 250 300 350 400 450 500 600 700 800 900 1000	125		

[Note] Consult us for non-standard stroke.

Specifications

Cylinder specification						
Bore size(mm)	32	40	50	63	80	100
Acting type	Double acting					
Fluid	Air(to be filtered by 40μm filter element)					
Mounting type	Basic FA FB CA CB LB TC TCM1					
Operating pressure	0.1~1.0MPa(15~145psi)(1.0~10.0bar)					
Proof pressure	1.5MPa(215psi)(15bar)					
Temperature ℃	-20~80					
Speed range mm/s	30~800					
Stroke tolerance	$0\sim250^{+1.0}_{0}$ $251\sim1000^{+1.5}_{0}$ $1001\text{-}1500^{+2.0}_{0}$					
Cushion type	Variable cushion					
Adjustable cushion stroke	21				28	29
Port size	1/8"	1/4"		3/8"		1/2"
PU tube size(ODXID)	Φ8×Φ5				Φ10×Φ6.5	
Solenoid valve specification						
Model	4M210-06 & 4M210-08			4M310-08 & 4M310-10		
Fluid	Air(to be filtered by 40μm filter element)					
Acting type	Internal piloted					
Port size [Note 1]	In=Exhaust=1/8" & In=1/4" Exhaust=1/8"			In=Exhaust=1/4" & In=PT3/8 Exhaust=1/4"		
Orifice size	4M210-06: 14.0mm²(Cv=0.78) 4M210-08: 16.0mm²(Cv=0.89)			4M310-08: 25.0mm²(Cv=1.40) 4M310-10: 30.0mm²(Cv=1.68)		
Valve type	5 port 2 position					
Operating pressure	0.15~0.8MPa(21~114psi)					
Proof pressure	1.5MPa(215psi)					
Temperature	-20~70					
Body material	Aluminum alloy					
Lubrication [Note 2]	Not requined					
Max. frequency [Note 3]	5 cycle/sec			4 cycle/sec		
Coil specification						
Standard voltage	AC220V AC110V AC24V DC24V DC12V					
Scope voltage	AC: ±15% DC: ±10%					
Power consumption	AC: 3.5VA DC: 3.0W					
Protection	IP65(DIN40050)					
Temperature classification	B Class					
Electrical entry	Terminal, Grommet					
Activating time	0.05 sec and below					

[Note 1] PT thread, G thread and NPT thread are available.
[Note 2] It cann't stop in the midway of lubricating. Lubricants like ISO VG32 or equivalent are recommended.
[Note 3] The maximum actuation frequency is in the no-load state.

Ordering code

SUF — 50 × 1000 — S — + — - — 06 — A — + — +

Model

SUF	Double acting with valve type

Bore size

32
40
50
63
80
100

Stroke

Refer to stroke table for details

Magnet

Blank	Without magnet
S	With magnet

Mounting type [Note1]

Blank	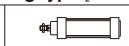
LB	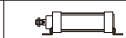
FA	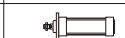
FB	
CA	
CB	
TC	

Pirt size

06	1/8"
08	1/4"
10	3/8"

Voltage

A	AC220V
B	DC24V
C	AC110V
E	AC24V
F	DC12V

Electrical entry

Blank	Terminal
I	Grommet

Thread type

Blank	PT
G	G
T	NPT

[Note 1] TC is used with TCM1.

Inner structure

SCT

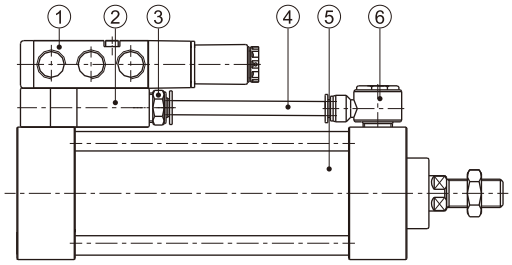

No.	Item
1	4M series solenoid valve
2	Unite block
3	APC series tube connector
4	PU tube
5	SU series cylinder
6	APH series tube connector

Dimensions

Pull when electrify

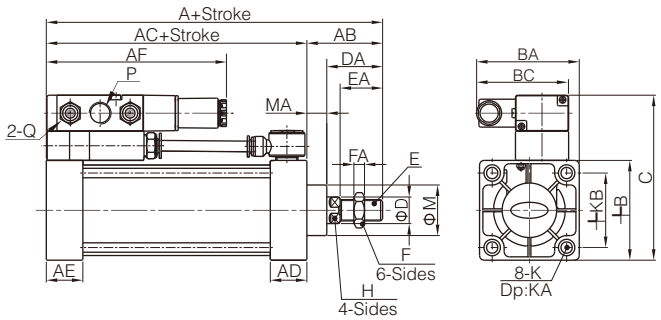

Bore size\Item	A	AB	AC	AD	AE	AF	AG	B	BA	BC	BD
32	140	47	93	27.5	27.5	118	53	45	67	67	77
40	142	49	93	27.5	27.5	118	53	50	68.5	67	80.5
50	150	57	93	27.5	27.5	120	51	62	72	67	89
63	153	57	96	27.5	27.5	135.5	54.5	75	77.5	69.5	96.5
80	182	75	107	33	33	137	53	94	86.5	69.5	106.5
100	188	75	113	33	33	135.5	54.5	112	96	69.5	115

Bore size\Item	C	CB	D	DA	E	EA	F	FA	M	MA
32	89	67	12	32	M10×1.25	22	17	6	28	15
40	94	72	16	34	M12×1.25	24	17	7	32	15
50	106	84	20	42	M16×1.5	32	23	8	38	15
63	124	97	20	42	M16×1.5	32	23	8	38	15
80	143	116	25	54	M20×1.5	40	26	10	47	21
100	161	134	25	54	M20×1.5	40	26	10	47	21

Push when electrify

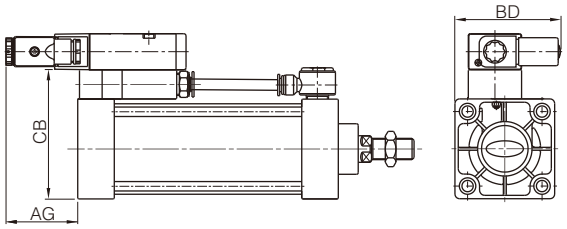

Bore size\Item	Compatible valve's type	P	Q	K	KA	KB	H
32	4M210-06	1/8"	1/8"	M6×1(No TC)	9.5(No TC)	33	10
	4M210-08	1/4"		M5×0.8(With TC)	10(With TC)		
40	4M210-06	1/8"	1/8"	M6×1(No TC)	9.5(No TC)	37	14
	4M210-08	1/4"		M5×0.8(With TC)	9(With TC)		
50	4M210-06	1/8"	1/8"	M6×1(No TC)	9.5(No TC)	47	17
	4M210-08	1/4"		M5×0.8(With TC)	9.5(With TC)		
63	4M310-08	1/4"	1/4"	M8×1.25(No TC)	9.5(No TC)	56	17
	4M310-10	3/8"		M6×1(With TC)	7.5(With TC)		
80	4M310-08	1/4"	1/4"	M10×1.5(No TC)	11.5(No TC)	70	22
	4M310-10	3/8"		M8×1.25(With TC)	11(With TC)		
100	4M310-08	1/4"	1/4"	M10×1.5(No TC)	11.5(No TC)	84	22
	4M310-10	3/8"		M8×1.25(With TC)	11(With TC)		

Remark: The dimensions of magnet type cylinder are the same as non-magnet type cylinder.

How to use

1. Options for piston rod to retract or extend when solenoid coil is energized.
2. Default factory setting will be piston rod to retract when energized(see Drawing one). Should you require piston rod to extend when energized, reposition the solenoid valve as shown in Drawing two.

Drawing one

Pull when energized

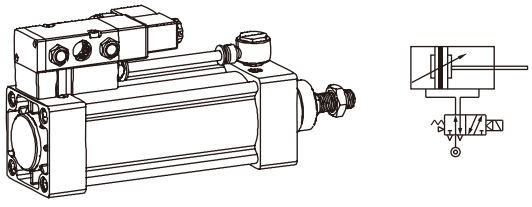

Drawing two

Push when energized

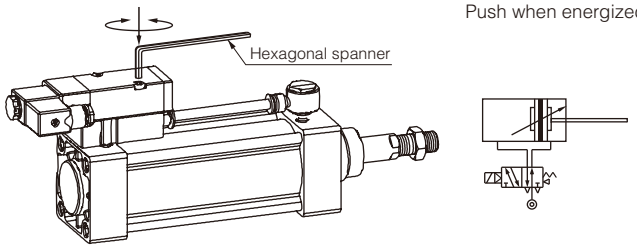

Attention

Ensure that the seals between the mounting block & valve are placed correctly when repositioning the valve.

List for ordering code of accessories

Accessories / Bore size	Mounting accessories					
	LB	FA\FB	CA	CB	TC	TCM1
32	F-SC32LB	F-SC32FA	F-SC32CA	F-SC32CB	F-SU32TC	F-SI32TCM1
40	F-SC40LB	F-SC40FA	F-SC40CA	F-SC40CB	F-SU40TC	F-SC40TCM1
50	F-SC50LB	F-SC50FA	F-SC50CA	F-SC50CB	F-SU50TC	F-SC40TCM1
63	F-SC63LB	F-SC63FA	F-SC63CA	F-SC63CB	F-SU63TC	F-SC40TCM1
80	F-SC80LB	F-SC80FA	F-SC80CA	F-SC80CB	F-SU80TC	F-SC80TCM1
100	F-SC100LB	F-SC100FA	F-SC100CA	F-SC100CB	F-SU100TC	F-SC80TCM1

Accessories / Bore size	Knuckle				Sensor switch					
	I: I Knuckle	Y: Y Knuckle	F: F Knuckle	U: U Knuckle	CS1-B□	DS1-B□	CS1-F	DS1-F	CS1-U	DS1-U
32	F-M10×125I	F-M10×125Y	F-M10×125F	F-M10×125U	CS1-B1	CS1-B1	CS1-F	DS1-F	CS1-U	DS1-U
40	F-M12×125I	F-M12×125Y	F-M12×125F	F-M12×125U	CS1-B1	CS1-B1				
50	F-M16×150I	F-M16×150Y	F-M16×150F	F-M16×150U	CS1-B1	CS1-B1				
63	F-M16×150I	F-M16×150Y	F-M16×150F	F-M16×150U	CS1-B2	CS1-B2				
80	F-M20×150I	F-M20×150Y	F-M20×150F	F-M20×150U	CS1-B3	CS1-B3				
100	F-M20×150I	F-M20×150Y	F-M20×150F	F-M20×150U	CS1-B4	CS1-B4				

Accessory selection

Cylinder model / Accessories		Mounting accessory							Knuckle				Sensor switch					
		LB	FA	FB	CA	CB	TC	TCM1	I	Y	U	F	CS1-B	DS1-B	CS1-F	DS1-F	CS1-U	DS1-U
SU\SUF	Standard	+	+	+	+	+	+	+	+	+	+	+	◦	◦	◦	◦	◦	◦
	With magnet	+	+	+	+	+	+	+	+	+	+	+	+	+	+	+	+	+
SUD	Standard	+	+	◦	◦	◦	+	+	+	+	+	+	◦	◦	◦	◦	◦	◦
	With magnet	+	+	◦	◦	◦	+	+	+	+	+	+	+	+	+	+	+	+
SUJ	Standard	+	+	◦	◦	◦	+	+	+	+	+	+	◦	◦	◦	◦	◦	◦
	With magnet	+	+	◦	◦	◦	+	+	+	+	+	+	+	+	+	+	+	+

Material of accessories

Accessories / Bore size	Mounting accessories							Knuckle			
	LB	FA	FB	CA	CB	TC	TCM1	I	Y	U	F
32~40	+	+	+	+	+	+	+	+	+	+	+

●——Aluminum alloy, +——Cast steel, +——Carbon steel.

Dimensions

TC

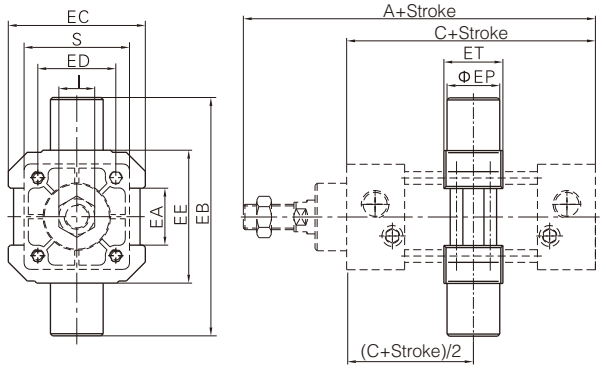

Bore size\Item	A	C	EA	EB	EC	ED	EE	EP	ET	I	S
32	140	93	20	74	52	33	50	12	22	17	45
40	142	93	27	113	65	37	63	25	28	17	50
50	150	93	31	126	75	47	76	25	28	23	62
63	153	96	42	138	90	56	88	25	30	23	75
80	182	107	54	164	112	70	114	25	32	26	94
100	188	113	68	182	135	84	132	25	38	26	112

TC

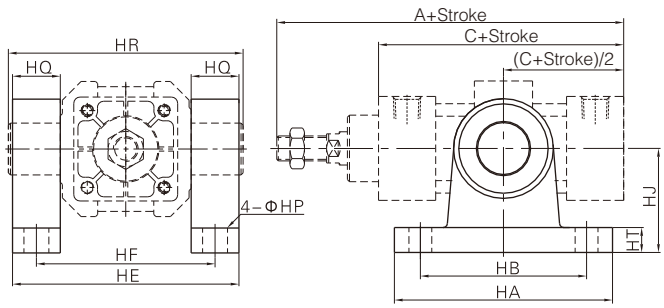

Bore size\Item	A	C	HA	HB	HE	HF	HP	HQ	HR	HT	HJ
32	140	93	80	60	72	62	9	12	74	11	40
40	142	93	103	80	109	86	11	23	113	12	50
50	150	93	103	80	122	99	11	23	126	12	50
63	153	96	103	80	134	111	11	23	138	12	50
80	182	107	110	85	160	137	13	23	164	12	70
100	188	113	110	85	178	155	13	23	182	12	70

Note) The TC accessory has been installed on the barrel of cylinder before it worked off, and the position of the accessories can not be adjusted arbitrarily.
If consumer orders the TC solely, he will not install it on the barrel of standard cylinder directly.
The others accessories are the same as SC series's accessories.

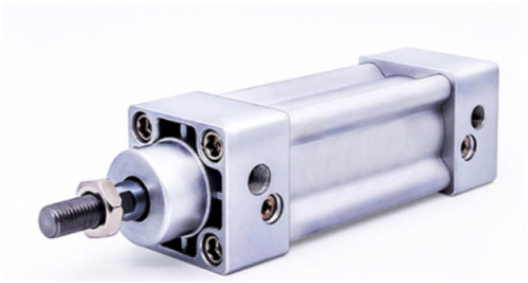

Specifications

Bore size(mm)		32	40	50	63	80	100	125	160	200
Acting type		Double acting								
Fluid		Air(to be filtered by 40μm filter element)								
Mounting type	SI	Basic FA FB CA CB LB TC FTC TCM1 TCM2								
	SID, SIJ	Basic FA LB TC FTC TCM1 TCM2								
Operating pressure		0.1~1.0MPa(15~145psi)(1.0~10.0bar)								
Proof pressure		1.5MPa(215psi)(15bar)								
Temperature ℃		-20~70								
Speed range mm/s		30~800						30~500		
Stroke tolerance		$0\sim250^{+1.0}_{0}$ $251\sim1000^{+1.5}_{0}$ $1001\text{-}1500^{+2.0}_{0}$								
Cushion type		Variable cushion								
Adjustable cushion stroke		27		30		36		40	50	
Port size [Note 1]		1/8"	1/4"		3/8"		1/2"		3/4"	

[Note 1] PT thread, G thread and NPT thread are available.

Symbol

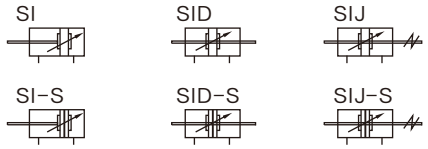

Stroke

Bore size (mm)	Standard stroke (mm)	Max.std stroke	Max. stroke
32	25 50 75 80 100 125 150 160 175 200 250 300 350 400 450 500	1000	1800
40	25 50 75 80 100 125 150 160 175 200 250 300 350 400 450 500 600 700 800	1200	1800
50	25 50 75 80 100 125 150 160 175 200 250 300 350 400 450 500 600 700 800 900 1000	1200	1800
63	25 50 75 80 100 125 150 160 175 200 250 300 350 400 450 500 600 700 800 900 1000	1500	1800
80	25 50 75 80 100 125 150 160 175 200 250 300 350 400 450 500 600 700 800 900 1000	1500	1800
100	25 50 75 80 100 125 150 160 175 200 250 300 350 400 450 500 600 700 800 900 1000	1500	1800
125	25 50 75 80 100 125 150 160 175 200 250 300 350 400 450 500 600 700 800 900 1000	1500	1800
160	25 50 75 80 100 125 150 160 175 200 250 300 350 400 450 500 600 700 800 900 1000	1500	2000
200	25 50 75 80 100 125 150 160 175 200 250 300 350 400 450 500 600 700 800 900 1000	1500	2000

[Note] Consult for non-standard stroke.

Product feature

1. ISO15552 (original ISO6431) standard cylinder;
2. The piston seal is composed of two Y-shape one-way seal structure, which has compensation function, long service life and low start-up pressure;
3. The ⋇-shaped aluminum pipe without tie rod has good corrosion esistance;
4. The buffer adjustment of cylinder is smooth and steady;
5. Cylinders and accessories for installation with several specifications are optional.

Ordering code

SI 160 + × 50 S + + +
SID 160 + × 50 S + + +
SIJ 160 + × 50 - 20 S + + +

Model

SI	Double acting type
SID	Double rod type
SIJ	Adjustable stroke type

Bore size

32
40
50
60
80
100
125
160
200

Rod material

Blank	Medium carbon steel
A	SUS420J2
B	SUS304

Stroke

Refer to stroke table for details

Adjustable stroke

10	10mm
20	20mm
30	30mm
40	40mm
50	50mm
75	75mm
100	100mm

Magnet

Blank	Without magnet
S	With magnet

Mounting type

	Mounting type	Available series	Memo
Blank	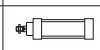	SI SID SIJ	
LB	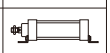		
FA	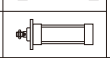		
FB	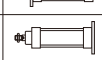	SI	
CA	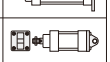		
CB	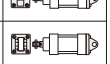		
CR	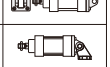		Be used with CB
FTC		SI SID SIJ	Be used with TCM1 TCM2
TC			

Seals material

Blank	TPU
H	Viton
N	NBR

Thread type

Blank	PT
G	G
T	NPT

Inner structure and material of major parts

SI

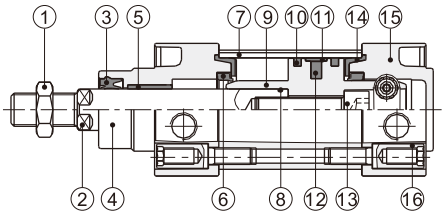

No.	Item	Material
1	Rod nut	Carbon steel
2	Piston rod	Carbon steel with 20μm chrome plated or stainless steel
3	Front cover packing	TPU
4	Front cover	Aluminum alloy
5	Bushing	Wear resistant material
6	Cushing O-ring	TPU
7	Barrel	Aluminum alloy
8	Rod O-ring	NBR
9	Piston	Aluminum alloy
10	Piston seal	TPU
11	Wear ring	Wear resistant material
12	Magnet	Plastic(P 100 or below)\Rubber(other)
13	Bolt	Carbon steel
14	Buffer gasket	TPU
15	Back cover	Aluminum alloy
16	Tie-rod	Carbon steel

Dimensions

SI

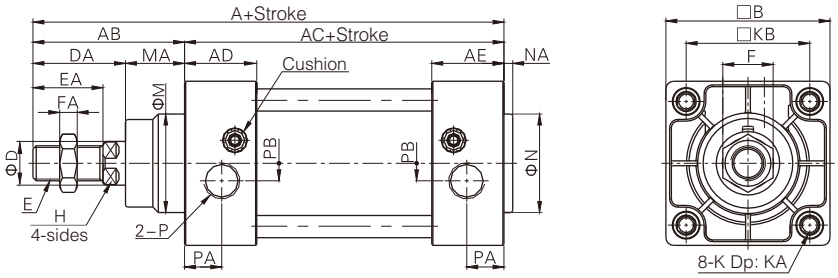

Bore size\Item	A	AB	AC	AD	AE	B	D	DA	E	EA	F	FA	M	MA	H	K(Without TC)	K(With TC)	KA(Without TC)	KA(With TC)	KB	N	NA	P	PA	PB
32	142	48	94	27.5	27.5	47	12	29	M10×1.25	22	17	6	30	19	10	M6	M5	16	14	32.5	30	3	PT1/8	13	5.5
40	159	54	105	32	32	53	16	33	M12×1.25	24	17	7	35	21	13	M6	M5	16	16	38	35	3.5	PT1/4	17	6
50	175	69	106	31	31	65	20	42	M16×1.5	32	23	8	40	27	17	M8	M6	16	16	46.5	40	3.5	PT1/4	15.5	7.5
63	190	69	121	33	33	75	20	42	M16×1.5	32	23	8	45	27	17	M8	M6	16	16	56.5	45	4	PT3/8	16.5	7.5
80	214	86	128	33	33	95	25	53	M20×1.5	40	26	10	45	33	22	M10	M8	17	16	72	45	4	PT3/8	16.5	9
100	229	91	138	37	37	115	25	55	M20×1.5	40	26	10	55	36	22	M10	M8	17	16	89	55	4	PT1/2	18.5	9.5
125	279	119	160	46	46	140	32	74	M27×2.0	54	40	13.5	60	45	27	M12	M12	20	20	110	60	4	PT1/2	23	14
160	332	152	180	50	50	180	40	94	M36×2.0	72	55	18	65	58	36	M16	M16	24	24	140	65	4	PT3/4	25	15
200	347	167	180	50	50	220	40	100	M36×2.0	72	55	18	75	67	36	M16	M16	24	24	175	75	5	PT3/4	25	15

Remark: The dimensions of magnet type cylinder are the same as non-magnet type cylinder.

SID

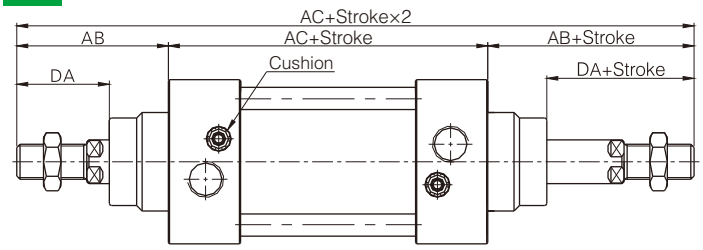

SIJ

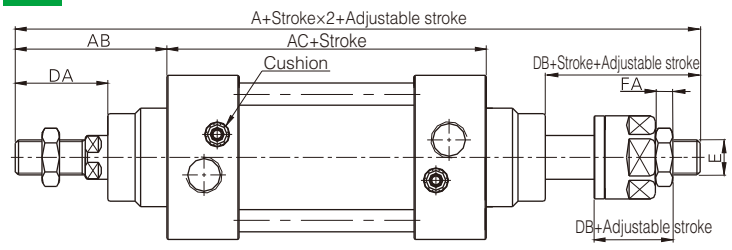

Bore size\Item	A(SID)	A(SIJ)	AB	AC	DA	DB	E	FA
32	190	188	48	94	29	27	M10×1.25	6
40	213	208	54	105	33	28	M12×1.25	7
50	244	231	69	106	42	29	M16×1.5	8
63	259	246	69	121	42	29	M16×1.5	8
80	300	282.5	86	128	53	35.5	M20×1.5	10
100	320	300.5	91	138	55	35.5	M20×1.5	10
125	398	366.5	119	160	74	42.5	M27×2.0	13.5
160	484	458	152	180	94	68	M36×2.0	18
200	514	482	167	180	100	68	M36×2.0	18

Remark:
1. The dimensions of magnet type cylinder are the same as non-magnet type cylinder.
2. The unmarked dimension is the same as SI standard type.



Symbol

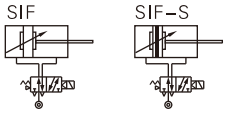

Product feature

1. For Standard Cylinders: use 4M210 valve for bore size 32, 40 & 50; 4M310 valve for bore size 63, 80 & 100mm.
2. Indivdually control, no need for extra solenoid valves.
3. Insrallation time & space saving; suitable for decentralize installation in large system.
4. Options of mounting accessories & easy installation.

Stroke

Bore size (mm)		Standard stroke (mm)	Mini. stroke	Max. std	Max. stroke
32	Standard type	50 75 80 100 125 150 160 175 200 250 300 350 400 450 500	50	1000	1800
	With TC type	100 125 150 160 175 200 250 300 350 400 450 500	100		
40	Standard type	50 75 80 100 125 150 160 175 200 250 300 350 400 450 500 600 700 800	50	1200	1800
	With TC type	100 125 150 160 175 200 250 300 350 400 450 500 600 700 800	100		
50	Standard type	50 75 80 100 125 150 160 175 200 250 300 350 400 450 500 600 700 800 900 1000	50	1200	1800
	With TC type	100 125 150 160 175 200 250 300 350 400 450 500 600 700 800 900 1000	100		
63 80 100	Standard type	50 75 80 100 125 150 160 175 200 250 300 350 400 450 500 600 700 800 900 1000	50	1500	1800
	With TC type	100 125 150 160 175 200 250 300 350 400 450 500 600 700 800 900 1000	100		

[Note] Consult us for non-standard stroke.

Specifications

Cylinder specification						
Bore size(mm)	32	40	50	63	80	100
Acting type	Double acting					
Fluid	Air(to be filtered by 40μm filter element)					
Mounting type	Basic FA FB CA CB CR LB TC FTC TCM1 TCM2					
Operating pressure	0.1~1.0MPa(15~145psi)(1.0~10.0bar)					
Proof pressure	1.5MPa(215psi)(15bar)					
Temperature ℃	-20~80					
Speed range mm/s	30~800					
Stroke tolerance	$0\sim250^{+1.0}_{0}$ $251\sim1000^{+1.5}_{0}$ $1001\text{-}1500^{+2.0}_{0}$					
Cushion type	Variable cushion					
Adjustable cushion stroke	27		30		36	
Port size	1/8"	1/4"		3/8"		1/2"
PU tube size(ODXID)	Φ8×Φ5				Φ10×Φ6.5	
Solenoid valve specification						
Model	4M210-06 & 4M210-08			4M310-08 & 4M310-10		
Fluid	Air(to be filtered by 40μm filter element)					
Acting type	Internal piloted					
Port size [Note 1]	In=Exhaust=1/8" & In=1/4" Exhaust=1/8"			In=Exhaust=1/4" & In=PT3/8 Exhaust=1/4"		
Orifice size	4M210-06: 14.0mm²(Cv=0.78) 4M210-08: 16.0mm²(Cv=0.89)			4M310-08: 25.0mm²(Cv=1.40) 4M310-10: 30.0mm²(Cv=1.68)		
Valve type	5 port 2 position					
Operating pressure	0.15~0.8MPa(21~114psi)					
Proof pressure	1.5MPa(215psi)					
Temperature	-20~70					
Body material	Aluminum alloy					
Lubrication [Note 2]	Not requined					
Max. frequency [Note 3]	5 cycle/sec			4 cycle/sec		
Coil specification						
Standard voltage	AC220V AC110V AC24V DC24V DC12V					
Scope voltage	AC: ±15% DC: ±10%					
Power consumption	AC: 3.5VA DC: 3.0W					
Protection	IP65(DIN40050)					
Temperature classification	B Class					
Electrical entry	Terminal, Grommet					
Activating time	0.05 sec and below					

[Note 1] PT thread, G thread and NPT thread are available.
[Note 2] It cann't stop in the midway of lubricating. Lubricants like ISO VG32 or equivalent are recommended.
[Note 3] The maximum actuation frequency is in the no-load state.

Ordering code

SIF **50 × 1000** **S** **+** **-** **06** **A** **+** **+**

Model

SIF	Double acting with valve type

Bore size

32
40
50
63
80
100

Stroke

Refer to stroke table for details

Magnet

Blank	Without magnet
S	With magnet

Mounting type

	Mounting type	Available series	Memo
Blank		SI	
LB			
FA			
FB			
CA			
CB			
CR			Be used with CB
FTC			Be used with TCM1 TCM2
TC			

Pirt size

06	1/8"
08	1/4"
10	3/8"

Voltage

A	AC220V
B	DC24V
C	AC110V
E	AC24V
F	DC12V

Electrical entry

Blank	Terminal
I	Grommet

Thread type

Blank	PT
G	G
T	NPT

Inner structure

SCT

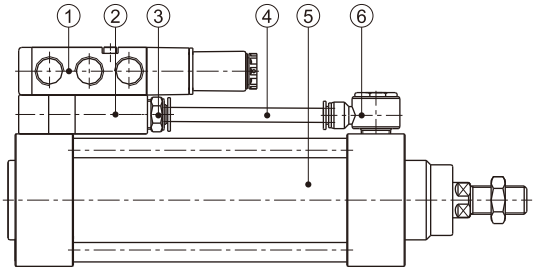

No.	Item
1	4M series solenoid valve
2	Unite block
3	APC series tube connector
4	PU tube
5	SI series cylinder
6	APH series tube connector

Dimensions

Pull when electrify

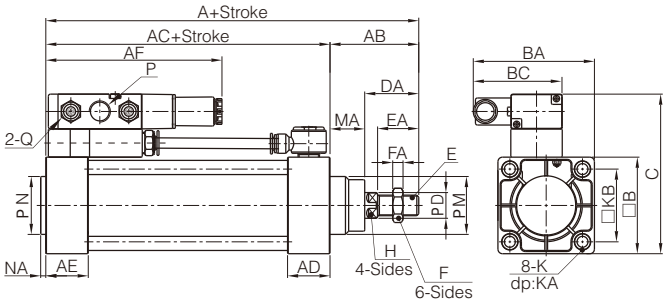

Bore size\Item	A	AB	AC	AD	AE	AF	AG	B	BA	BC	BD
32	142	48	94	27.5	27.5	117.5	53.5	47	78.5	67	67.5
40	159	54	105	32	32	120	51	53	82	67	70
50	175	69	106	31	31	118.5	52.5	65	89.5	67	74.5
63	190	69	121	33	33	137	53	75	94.5	69.5	79.5
80	214	86	128	33	33	137	53	95	105.5	69.5	88
100	229	91	138	37	37	137.5	52.5	115	118	69.5	96

Bore size\Item	C	CB	D	DA	E	EA	F	FA	M	MA	N	NA
32	91	69	12	29	M10×1.25	22	17	6	30	19	30	3
40	97	75	16	33	M12×1.25	24	17	7	35	21	35	3.5
50	109	87	20	42	M16×1.5	32	23	8	40	27	40	3.5
63	124	97	20	42	M16×1.5	32	23	8	45	27	45	4
80	144	117	25	53	M20×1.5	40	26	10	45	33	45	4
100	164	137	25	55	M20×1.5	40	26	10	55	36	55	4

Push when electrify

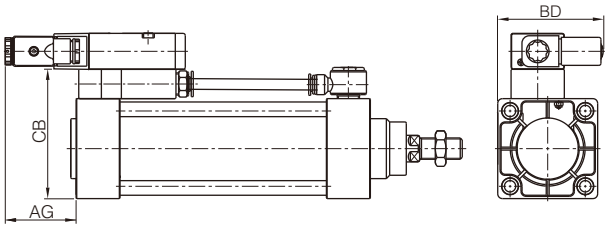

Bore size\Item	Compatible valve's type	P	Q	K	KA	KB	H
32	4M210-06	1/8"	1/8"	M6(No TC)	16(No TC)	32.5	10
	4M210-08	1/4"		M5(With TC)	14(With TC)		
40	4M210-06	1/8"	1/8"	M6(No TC)	16(No TC)	38	13
	4M210-08	1/4"		M5(With TC)	16(With TC)		
50	4M210-06	1/8"	1/8"	M8(No TC)	16(No TC)	46.5	17
	4M210-08	1/4"		M6(With TC)	16(With TC)		
63	4M310-08	1/4"	1/4"	M8(No TC)	16(No TC)	56.5	17
	4M310-10	3/8"		M6(With TC)	16(With TC)		
80	4M310-08	1/4"	1/4"	M10(No TC)	17(No TC)	72	22
	4M310-10	3/8"		M8(With TC)	16(With TC)		
100	4M310-08	1/4"	1/4"	M10(No TC)	17(No TC)	89	22
	4M310-10	3/8"		M8(With TC)	16(With TC)		

Remark: The dimensions of magnet type cylinder are the same as non-magnet type cylinder.

How to use

1. Options for piston rod to retract or extend when solenoid coil is energized.
2. Default factory setting will be piston rod to retract when energized (see Drawing one). Should you require piston rod to extend when energized, reposition the solenoid valves as shown in Drawing two.

Drawing one

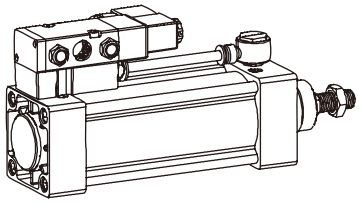

Pull when energized

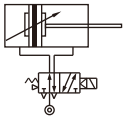

Drawing two

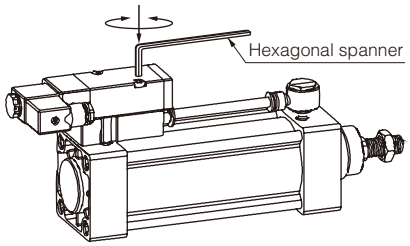

Push when energized

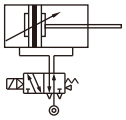

Attention

Ensure that the seals between the mounting block & valve are placed correctly when repositioning the valve.

List for ordering code of accessories

Accessories / Bore size	Mounting accessories								
	LB	FA\FB	CA	CB	CR	TC	FTC	TCM1	TCM2
32	F-SI32LB	F-SI32FA	F-SI32CA	F-SI32CB	F-SI32CR	F-SI32TC	F-SI32FTC	F-SI32TCM1	F-SI32TCM2
40	F-SI40LB	F-SI40FA	F-SI40CA	F-SI40CB	F-SI40CR	F-SI40TC	F-SI40FTC	F-SI40TCM1	F-SI40TCM2
50	F-SI50LB	F-SI50FA	F-SI50CA	F-SI50CB	F-SI50CR	F-SI50TC	F-SI50FTC	F-SI50TCM1	F-SI50TCM2
63	F-SI63LB	F-SI63FA	F-SI63CA	F-SI63CB	F-SI63CR	F-SI63TC	F-SI63FTC	F-SI63TCM1	F-SI63TCM2
80	F-SI80LB	F-SI80FA	F-SI80CA	F-SI80CB	F-SI80CR	F-SI80TC	F-SI80FTC	F-SI80TCM1	F-SI80TCM2
100	F-SI100LB	F-SI100FA	F-SI100CA	F-SI100CB	F-SI100CR	F-SI100TC	F-SI100FTC	F-SI100TCM1	F-SI100TCM2
125	F-SI125LB	F-SI125FA	F-SI125CA	F-SI125CB	F-SI125CR	F-SI125TC	F-SI125FTC	F-SI125TCM1	F-SI125TCM2
160	F-SI160LB	F-SI160FA	F-SI160CA	F-SI160CB	F-SI160CR	F-SI160TC	F-SI160FTC	F-SI160TCM1	F-SI160TCM2
200	F-SI200LB	F-SI200FA	F-SI200CA	F-SI200CB	F-SI200CR	F-SI200TC	F-SI200FTC	F-SI200TCM1	F-SI200TCM2

Accessories / Bore size	Knuckle				Sensor switch					
	I: I Knuckle	Y: Y Knuckle	F: F Knuckle	U: U Knuckle	CS1-B□	DS1-B□	CS1-F	DS1-F	CS1-U	DS1-U
32	F-M10×125I	F-M10×125Y	F-M10×125F	F-M10×125U	CS1-B1	DS1-B1	CS1-F	DS1-F	CS1-U	DS1-U
40	F-M12×125I	F-M12×125Y	F-M12×125F	F-M12×125U	CS1-B1	DS1-B1				
50	F-M16×150I	F-M16×150YI	F-M16×150F	F-M16×150U	CS1-B2	DS1-B2				
63	F-M16×150I	F-M16×150Y	F-M16×150F	F-M16×150U	CS1-B2	DS1-B2				
80	F-M20×150I	F-M20×150Y	F-M20×150F	F-M20×150U	CS1-B3	DS1-B3				
100	F-M20×150I	F-M20×150Y	F-M20×150F	F-M20×150U	CS1-B4	DS1-B4				
125	F-M27×200I	F-M27×200Y	-	F-M27×200U	CS1-B5	DS1-B5				
160	F-M36×200I	F-M36×200Y	-	F-M36×200U	CS1-B6	DS1-B6				
200	F-M36×200I	F-M36×200Y	-	F-M36×200U	CS1-B7	DS1-B7				

Accessory selection

Cylinder model / Accessories		Mounting accessory										Knuckle				Sensor switch					
		LB	FA	FB	CA	CB	CR	TC	FTC	TCM1	TCM2	I	Y	U	F	CS1-B	DS1-B	CS1-F	DS1-F	CS1-U	DS1-U
SU\SUF	Standard	+	+	+	+	+	+	+	+	+	+	+	+	+	+	°	°	°	°	°	°
	With magnet	+	+	+	+	+	+	+	+	+	+	+	+	+	+	+	+	+	+	+	+
SUD	Standard	+	+	°	°	°	°	+	+	+	+	+	+	+	+	°	°	°	°	°	°
	With magnet	+	+	°	°	°	°	+	+	+	+	+	+	+	+	+	+	+	+	+	+
SUJ	Standard	+	+	°	°	°	°	+	+	+	+	+	+	+	+	°	°	°	°	°	°
	With magnet	+	+	°	°	°	°	+	+	+	+	+	+	+	+	+	+	+	+	+	+

Material of accessories

Accessories / Bore size	Mounting accessories										Knuckle			
	LB	FA	FB	CA	CB	CR	TC	FTC	TCM1	TCM2	I	Y	U	F
32~40	+	+	+	+	+	+	+	+	+	+	+	+	+	+
125~200	+	+	+	+	+	+	+	+	+	+	+	+	+	+

●——Aluminum alloy, +——Cast steel,
+——Low carbon steel, +——Nodular cast iron, +——Carbon steel.

Accessories dimensions

LB

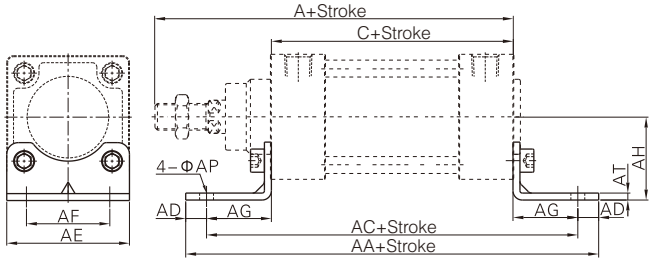

Bore size\Item	A	C	AA	AC	AD	AE	AF	AG	AH	AP	AT
32	142	94	158	142	8	47	32	24	32	7	3
40	159	105	179	161	9	53	36	28	36	9	3
50	175	106	190	170	10	65	45	32	45	9	3
63	190	121	209	185	12	75	50	32	50	9	3
80	214	128	248	210	19	95	63	41	63	12.5	4
100	229	138	266	220	19	115	75	41	71	14.5	4
125	279	160	290	250	20	140	90	45	90	16.5	6
160	332	180	340	300	20	180	115	60	115	18.5	8
200	347	180	380	320	30	220	135	70	135	24	9

FA\FB

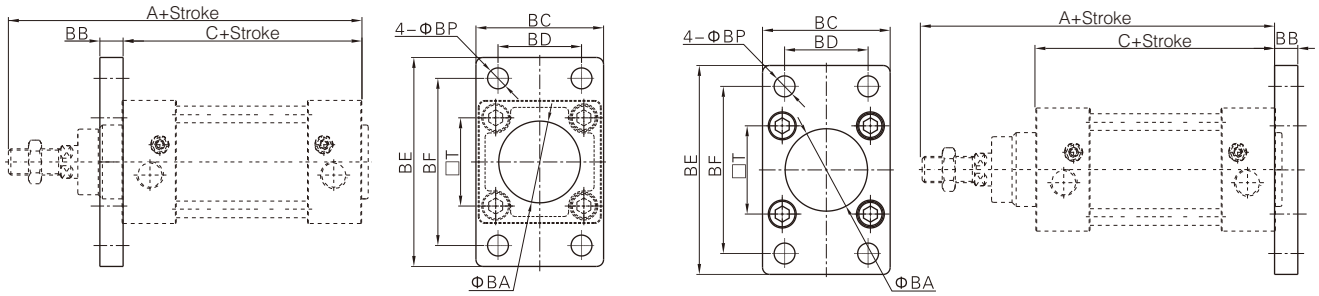

Bore size\Item	A	C	BA	BB	BC	BD	BE	BF	BP	T
32	142	94	30.5	10	47	32	80	64	7	32.5
40	159	105	35.5	10	53	36	90	72	9	38
50	175	106	40.5	12	65	45	108	90	9	46.5
63	190	121	45.5	12	75	50	118	100	9	56.5
80	214	128	45.5	16	95	63	150	126	12.5	72
100	229	138	55.5	16	115	75	176	150	14.5	89
125	279	160	60.5	20	139	90	218	180	16.5	110
160	332	180	65.5	20	180	115	280	230	18.5	140
200	347	180	75.5	25	220	135	320	270	24	175

CA

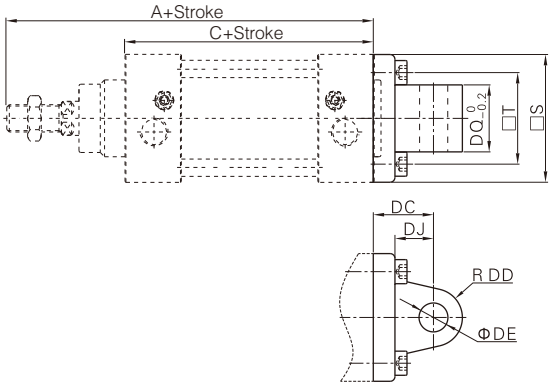

Bore size\Item	A	C	S	T	DC	DD	DE	DJ	DQ
32	142	94	47	32.5	22	9	10	13	25.8
40	159	105	52	38	25	10.5	12	16	27.8
50	175	106	64	46.5	27	11	12	17	31.7
63	190	121	74	56.5	32	13.5	16	22	39.7
80	214	128	94	72	36	14.5	16	22	49.7
100	229	138	113	89	41	17	20	27	59.7
125	279	160	139	110	50	22	25	33	69.7
160	332	180	180	140	55	30	30	35.5	89.7
200	347	180	220	175	60	30	30	37	89.7

CB

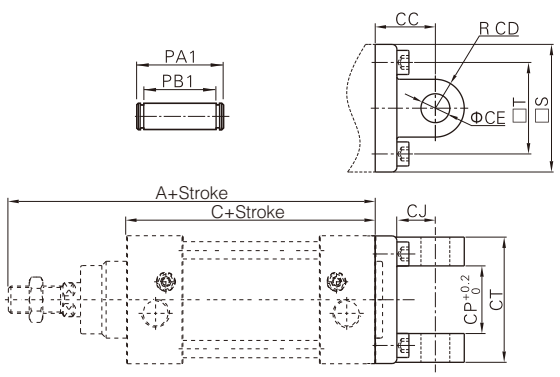

Bore size\Item	A	C	CC	CD	CE	CJ	CP	CT	PA1	PB1	S	T
32	142	94	22	9	10	13	26	45	51	45.5	47	32.5
40	159	105	25	10.5	12	16	28	52	59	52.5	52	38
50	175	106	27	11	12	17	32	60	67	60.5	64	46.5
63	190	121	32	13	16	22	40	70	77	70.5	74	56.5
80	214	128	36	14	16	22	50	90	97	90.5	94	72
100	229	138	41	17.5	20	27	60	110	119	110.5	113	89
125	279	160	50	21.5	25	33	70	130	139	130.5	139	110
160	332	180	55	30	30	35.5	90	170	181	170.5	180	140
200	347	180	60	30	30	36	90	170	181	170.5	220	175

CR

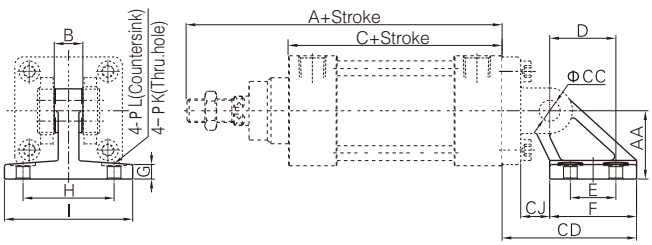

Bore size\Item	A	AA	B	C	CC	CD	CJ	D	E	F	G	H	I	K	L
32	142	32	26	94	10	50	10	21	18	31	8	38	51	6.6	-
40	159	36	28	105	12	56	12	24	22	35	10	41	54	6.6	-
50	175	45	32	106	12	68	13	33	30	45	12	50	65	9	-
63	190	50	40	121	16	77	17	37	35	50	12	52	67	9	-
80	214	63	50	128	16	93	19	47	40	60	14	66	86	11	18
100	229	71	60	138	20	106	22	55	50	70	15	76	96	11	18
125	279	90	70	160	25	135	26	70	60	90	20	94	124	14	20
160	332	115	90	180	30	171	25	97	88	126	25	118	156	14	20
200	347	135	90	180	30	185	31	105	90	130	30	122	162	18	26

Note) CR can't be used alone, it must be used with CB.

TC

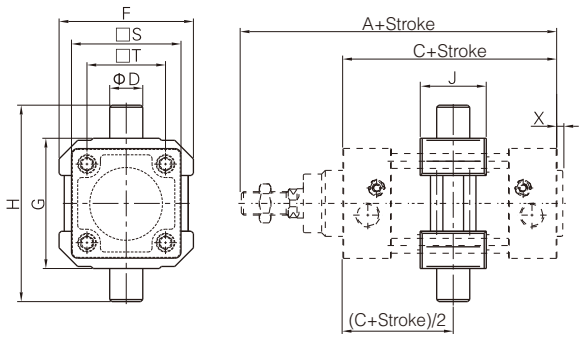

Bore size\Item	A	C	D	F	G	H	J	S	X	T
32	142	94	12	52	50	74	22	47	3	32.5
40	159	105	16	65	63	95	28	53	3.5	38
50	175	106	16	75	75	107	28	65	3.5	46.5
63	190	121	20	90	90	130	30	75	4	56.5
80	214	128	20	112	110	150	32	95	4	72
100	229	138	25	135	132	182	38	115	4	89
125	279	160	25	170	160	210	40	140	4	110
160	332	180	32	210	200	264	50	180	4	140
200	347	180	32	255	250	314	50	220	5	175

Note) The TC accessory has been installed on the barrel of cylinder before it worked off, and the position of the accessories can not be adjusted arbitrarily.
If consumer orders the TC solely, he will not install it on the barrel of standard cylinderdirectly.

FTC

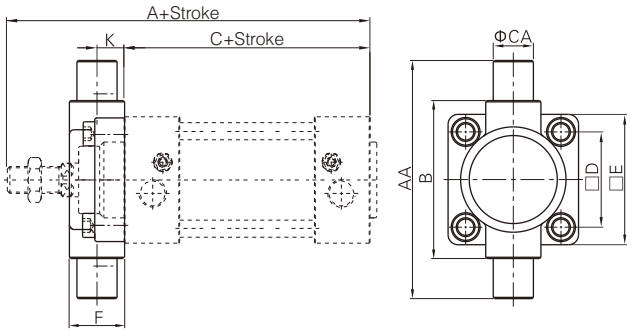

Bore size\Item	A	C	AA	B	CA	D	E	F	K
32	142	94	74	50	12	32.5	46	19	10
40	159	105	95	63	16	38	52	21	10
50	175	106	107	75	16	46.5	64	26	12
63	190	121	130	90	20	56.5	74	28	12
80	214	128	150	110	20	72	94	31	16
100	229	138	182	132	25	89	114	35	16
125	279	160	210	160	25	110	139	43	20
160	332	180	264	200	32	140	179	56	20
200	347	180	314	250	32	175	218	64	20

TCM1

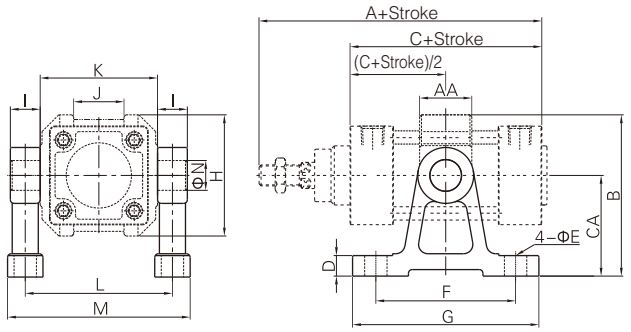

Bore size\Item	A	C	AA	B	CA	D	E	F	G	H	I	J	K	L	M	N
32	142	94	22	66	40	11	9	60	80	52	12	20	50	62	77	12
40	159	105	28	86.5	54	11	12	75	100	65	16	27	63	79	98	16
50	175	106	28	91.5	54	11	12	75	100	75	16	31	75	91	110	16
63	190	121	30	115	70	11	12	85	110	90	20	42	90	110	133	20
80	214	128	32	126	70	11	12	85	110	112	20	54	110	130	153	20
100	229	138	38	157.5	90	19	18	115	155	135	25	68	132	157	185	25
125	279	160	40	175	90	19	18	115	155	170	25	80	160	185	213	25
160	332	180	50	215	110	24	22	140	190	210	32	100	200	232	267	32
200	347	180	50	262.5	135	27	22	150	200	255	32	125	250	282	317	32

Note) The installation position of the accessories can not be adjusted arbitrarily. When TCM1 be used with FTC.

TCM2

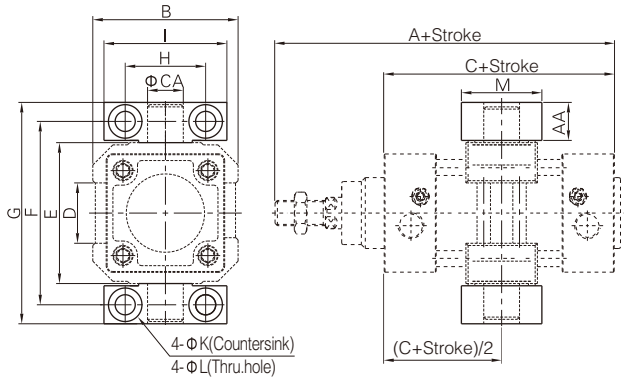

Bore size\Item	A	AA	B	C	CA	D	E	F	G	H	I	K	L	M
32	142	14	52	94	12	20	50	66	80	32	46	11	7	30
40	159	17	65	105	16	27	63	82	99	36	55	15	9	36
50	175	17	75	106	16	31	75	94	111	36	55	15	9	36
63	190	20.5	90	121	20	42	90	113.5	134	42	65	18	11	40
80	214	20.5	112	128	20	54	110	133.5	154	42	65	18	11	40
100	229	24.5	135	138	25	68	132	159.5	184	50	75	20	14	50
125	279	24.5	170	160	25	80	160	187.5	212	50	75	20	14	50
160	332	30	210	180	32	100	200	234	264	60	92	26	18	60
200	347	30	255	180	32	125	250	284	314	60	92	26	18	60

Note) The installation position of the accessories can not be adjusted arbitrarily. When TCM2 be used with FTC.



Specifications

Bore size(mm)		32	40	50	63	80	100	125
Port size		G1/8	G1/4	G1/4	G3/8	G3/8	G1/2	G1/2
Piston rod terminal		External thread						
Piston rod thread		M10×1.25	M12×1.25	M16×1.5	M16×1.5	M20×1.5	M20×1.5	M27×2
Buffer form		Flexible cushioning rings/pads at both ends						
		Pneumatic cushioning, adjustable at both ends						
Buffer length (mm)		20	20	22	22	32	32	42
Theoretical force at 6 bar, advancing	(N)	483	754	1178	1870	3016	4712	7363
	S2(N)	415	633	990	1682	2721	4418	6881
Theoretical force at 6 bar, retracting		415	633	990	1682	2721	4418	6881
Maximum torque Q on the piston rod (Nm)		0.8	1.1	1.5	1.5	3	3	-
Length of 0 mm stroke (mm)		146	163	179	194	218	233	285
Width (mm)		45	54	64	75	93	110	134
Height (mm)		45	54	64	75	93	110	134

Symbol

Without position sensing

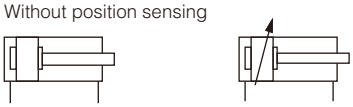

With position sensing

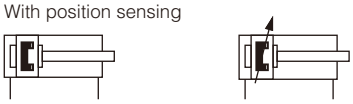

Product feature

1. The journey is 2000 mm;
2. There are profile grooves for proximity switch on three sides;
3. There are many derivative products, which are suitable for customization occasions;
4. Providing spare parts services;
5. Providing maintenance services:
   DNC-80, with different itineraries or derivatives
   DNC-100
   DNC-125
5. Specific formats conforming to ATEX instructions can be used in working environments with potential explosive hazards.

Ordering code

DNC | 50 | 100 | P | A | Q | + | S6

Model

DNC	Double-acting standard cylinder

Bore size

32
40
50
63
80
100
125

Stroke

25,40,50,80,100,	10...2000
125,160,200,250,	
320,400,500	

Acting type

P	Flexible cushioning rings/pads at both ends
PPV	Pneumatic cushioning, adjustable at both ends

Position sensing

Blank	Without position sensing
A	Via proximity sensor

Torsion resistance

Blank	without
Q	Square piston rod Note 1

Piston rod type

Blank	One end piston rod
S2	Double-ended piston rod

Heat resistance temperature

S6	Heat-resistant seals, Maximum temperature 120℃

Note 1: It is not suitable for the maximum stroke of products whose piston diameter is Φ125 mm: 10... 1500 mm.

Examples of orders:
DNC cylinder diameter 63 mm, stroke 100 mm, with adjustable buffer, with position sensing
Correct model:
DNC-63-100-PPV-A

Examples of orders:
DNC cylinder diameter 80 mm, stroke 320 mm, with adjustable buffer, with position sensing, piston rod lengthening 75 mm, thread lengthening 35 mm
Correct model:
DNC-83-320-PPV-A-75K8-35K2

Inner structure and material of major parts

DNC

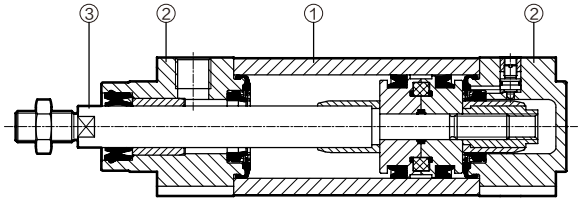

Standard cylinder	Basic version	CT	K10	R3
① Profile barrel	Wrought aluminium alloy, smooth anodised	Refined aluminium alloy, anodic oxidation	Refined Aluminum Alloy, Smooth Anodic Oxidation	
② Bearing and end caps	Die-cast aluminium			
③ Piston rod	High-alloy steel		Refined aluminium alloy, anodic oxidation	High-alloy stainless steel
– Seals	Polyurethane, nitrile rubber			

Standard cylinder	R8	S6	S10	S11	TT
① Profile barrel	Wrought aluminium alloy, smooth anodised				
② Bearing and end caps	Die-cast aluminium				Coated aluminum
③ Piston rod	Tempered steel, hard-chromium plated	High-alloy steel			
– Seals	Polyurethane, nitrile rubber	Fluoro rubber			polyurethane

Dimensions

Basic Version

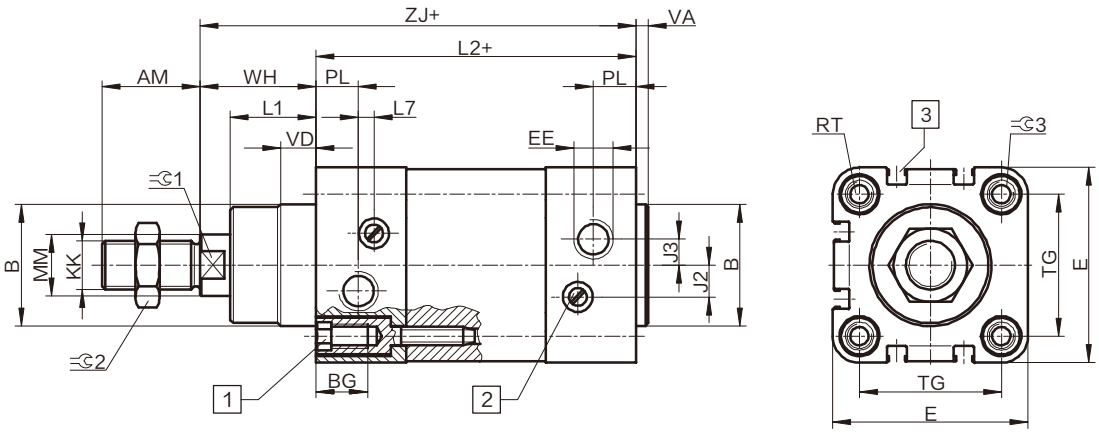

1 Six angle bolt, with internal thread, used for mounting accessories

2 Regulating screw for adjustable end-position cushioning

3 Slot for proximity sensor SME/SMT-8

\+ = plus stroke length

S2-Through piston rod

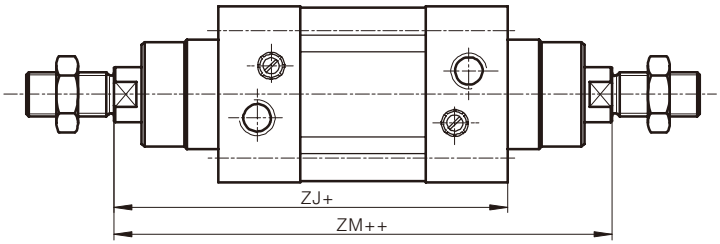

Q-Square piston rod

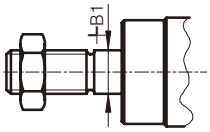

Note: The threads at both ends of the piston rod are identical. When combined with derivative Q, the piston rod on the left side is square and the piston rod on the right side is circular.

\+ = plus stroke length
++ = plus 2× stroke length

Bore size\Item	AM	P B d11	⊣B1	BG	E	EE	J2	J3	KK	L1	L2	L7	P MM	PL	RT	TG	VA	VD	WH	ZJ	ZM	⌭1	⌭2	⌭3
32	22	30	10	16	45	G1/8	6	5.2	M10×1.25	18	94	3.3	12	15.6	M6	32.5	4	10	26	120	148	10	16	6
40	24	35	12	16	54	G1/4	8	6	M12×1.25	21.5	105	3.6	16	14	M6	38	4	10.5	30	135	167	13	18	6
50	32	40	16	17	64	G1/4	10.4	8.5	M16×1.5	28	106	5.1	20	14	M8	46.5	4	11.5	37	143	183	17	24	8
63	32	45	16	17	75	G3/8	12.4	10	M16×1.5	28.5	121	6.6	20	17	M8	56.5	4	15	37	158	199	17	24	8
80	40	45	20	17	93	G3/8	12.5	8	M20×1.5	34.7	128	10.5	25	16.4	M10	72	4	15.7	46	174	222	22	30	6
100	40	55	20	17	110	G1/2	12	10	M20×1.5	38.2	138	8	25	18.8	M10	89	4	19.2	51	186	240	22	30	6
125	54	60	-	22	134	G1/2	13	8	M27×2	46	160	14	32	18	M12	110	6	20.5	65	225	291	27	36	8

Attachment Dimensions

Scaffold Installation/HNC

Material Science
HNC: Galvanized Steel
Free of copper, PTFE and silicon

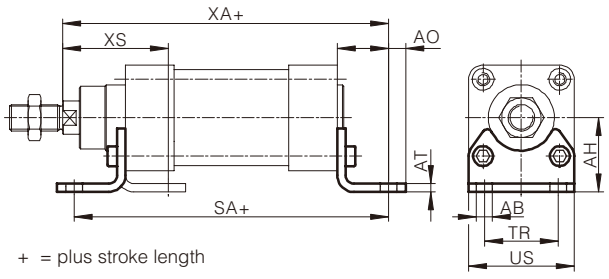

\+ = plus stroke length

Bore size\Item	P AB	AH	AO	AT	AU	SA		TR	US	XA		XS
						Basic thread	KP			Basic thread	KP	
32	7	32	6.5	4	24	142	187	32	45	144	189	45
40	10	36	9	4	28	161	214	36	54	163	216	53
50	10	45	9.5	5	32	170	237	45	64	175	242	62
63	10	50	12.5	5	32	185	261	50	75	190	266	63
80	12	63	15	6	41	210	305	63	93	215	310	81
100	14.5	71	17.5	6	41	220	318	75	110	230	328	86
125	16.5	90	22	8	45	250	375	90	131	270	395	102

Flange mounting FNC

Material FNC: Galvanized steel, free of copper, PTFE and silicon

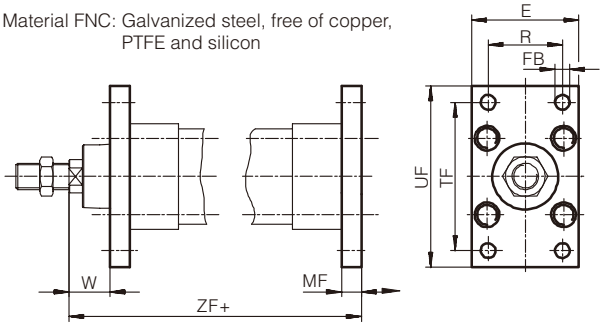

+ = plus stroke length

Bore size\Item	E	P FB H13	MF	R	TF	UF	W	ZF	
								Basic type	KP
32	45	7	10	32	64	80	16	130	175
40	54	9	10	36	72	90	20	145	198
50	65	9	12	45	90	110	25	155	222
63	75	9	12	50	100	120	25	170	246
80	93	12	16	63	126	150	30	190	285
100	110	14	16	75	150	175	35	205	303
125	132	16	20	90	180	210	45	245	370

Trunnion flange ZNCF

Material ZNCF: Galvanized steel, free of copper, PTFE and silicon

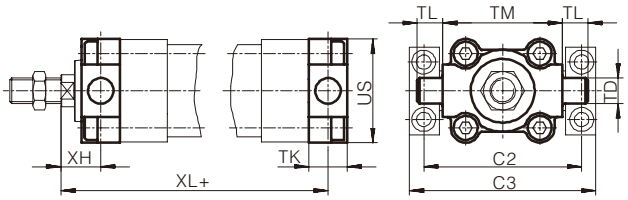

+ = plus stroke length

Bore size\Item	C2	C3	P TD e9	TK	TL	TM	US	XH	XL	
									Basic type	KP
32	71	86	12	16	12	50	45	18	128	173
40	87	105	16	20	16	63	54	20	145	198
50	99	117	16	24	16	75	64	25	155	222
63	116	136	20	24	20	90	75	25	170	246
80	136	156	20	28	20	110	93	32	188	183
100	164	189	25	38	25	132	110	32	208	306
125	192	217	25	50	25	160	131	40	250	375

Trunnion Installation Module ZNCM For Basic Cylinder DNC

The mounting kit can be attached at any position along the profile barrel of a cylinder.

Material ZNCM: Galvanized steel, free of copper, PTFE and silicon

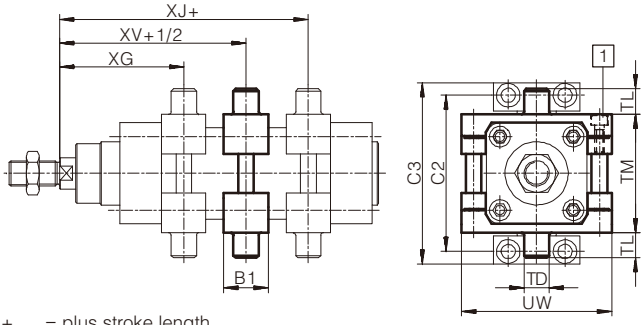

+ = plus stroke length
+1/2 = plus half stroke length

[1] Max. tightening torque

For \DNC-KP

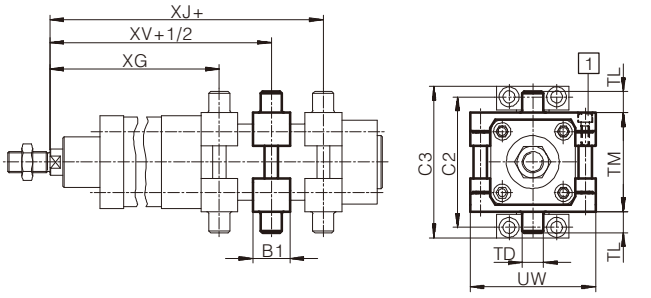

+ = plus stroke length
+1/2 = plus half stroke length

[1] Max. tightening torque

Bore size\Item	B1	C2	C3	P TD e9	TL	TM	UW	XG	
								Basic type	KP
32	30	71	86	12	12	50	65	66.1	111.1
40	32	87	105	16	16	63	75	75.6	128.6
50	34	99	117	16	16	75	95	83.6	150.6
63	41	116	136	20	20	90	105	93.1	169.1
80	44	136	156	20	20	110	130	103.9	198.9
100	48	164	189	25	25	132	145	113.8	211.8
125	50	192	217	25	25	160	175	134.7	259.7

Trunnion support LNZG

Material: Trunnion support: Anodised aluminium
Plain bearing: Polymer Free of copper and PTFE

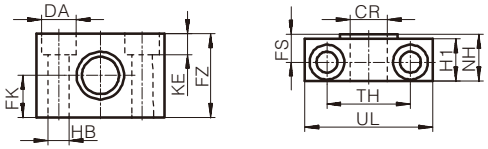

Bore size\Item	P CR D11	P DA H13	P FK § 0.1	FN	FS	H1	P HB H13	KE	NH	TH § 0.2	UL
32	12	11	15	30	10.5	15	6.6	6.8	18	32	46
40, 50	16	15	18	36	12	18	9	9	21	36	55
63, 80	20	18	20	40	13	20	11	11	23	42	65
100, 125	25	20	25	50	16	24.5	14	13	28.5	50	75

Swivel flange SNC

Material: Die-cast aluminium free of copper and PTFE

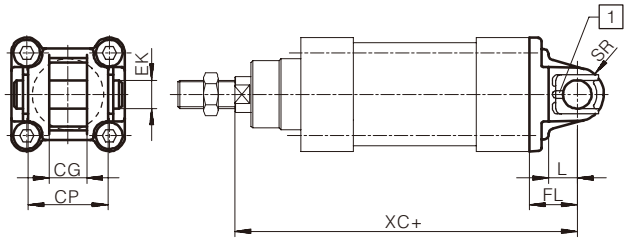

+ = plus stroke length

1 The pivot pin is protected against rotation with a dowel pin.

Bore size\Item	CG H14	CP h14	P EK	FL § 0.2	L	SR	XC	
							Basic type	KP
32	14	34	10	22	13	10	142	187
40	16	40	12	25	16	12	160	213
50	21	45	16	27	16	12	170	237
63	21	51	16	32	21	16	190	266
80	25	65	20	36	22	20	210	305
100	25	75	20	41	27	20	230	328
125	37	97	30	50	30	30	275	400

Swivel flange SNCB

Material SNCB: Die-cast aluminium free of copper and PTFE

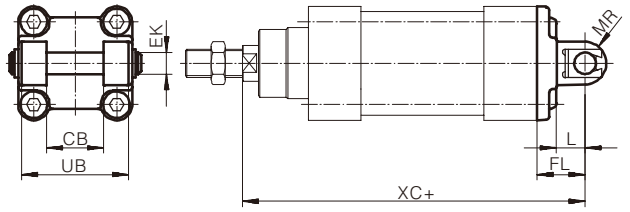

+ = plus stroke length

Bore size\Item	CB H14	P EK e8	FL § 0.2	L	MR	UB h14	XC	
							Basic type	KP
32	26	10	22	13	10	45	142	187
40	28	12	25	16	12	52	160	213
50	32	12	27	16	12	60	170	237
63	40	16	32	21	16	70	190	266
80	50	16	36	22	16	90	210	305
100	60	20	41	27	20	110	230	328
125	70	25	50	30	25	130	275	400

Swivel flange SNCS

Material SNCS: Die-cast aluminium

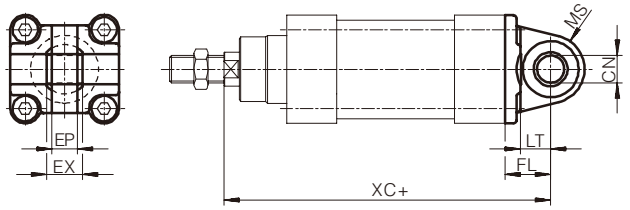

+ = plus stroke length

Bore size\Item	P CN H7	EP +0.2	EX	FL ±0.2	LT	MS	XC	
							Basic type	KP
32	10	10.5	14	22	13	15	142	187
40	12	12	16	25	16	17	160	213
50	16	15	21	27	16	20	170	237
63	16	15	21	32	21	22	190	266
80	20	18	25	36	22	27	210	305
100	20	18	25	41	27	29	230	328
125	30	25	37	50	30	39	275	400

Swivel flange SNCL

Material SNCL: Die-cast aluminium free of copper and PTFE

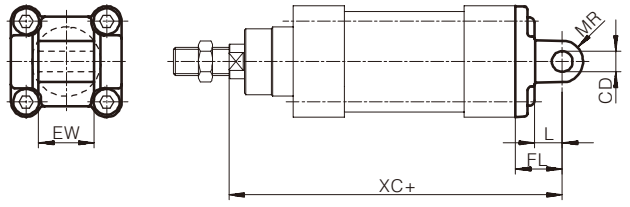

+ = plus stroke length

Bore size\Item	P CD H9	EW h12	FL § 0.2	L	MR	XC	
						Basic type	KP
32	10	26	22	13	10	142	187
40	12	28	25	16	12	160	213
50	12	32	27	16	12	170	237
63	16	40	32	21	16	190	266
80	16	50	36	22	16	210	305
100	20	60	41	27	20	230	328
125	25	70	50	30	20	275	400

Specifications

Bore size(mm)	40	50	63	80	100
Use pressure range	0.05~1.0MPa				
Environment and fluid temperature	Without magnetic switch: -10℃~70℃, With magnetic switch: -10℃~60℃				
Use piston speed	50~500mm/s				
Buffer	Air buffer				
Travel length allowance (mm)	~250: $^{+1.0}_{0}$, 251~1000: $^{+1.4}_{0}$, 1001~1500: $^{+1.8}_{0}$				
Lubrication	Don't need				
Pipe size (Rc)	1/4	3/8		1/2	

Product feature

1. The mass is 5-15% less than that of NCA1 series.
2. With the improvement of cushioning capacity, the phenomenon of rapid extension of piston rod will not occur.
3. The buffer valve is easier to adjust, and the buffer valve does not show the cylinder head surface.
4. The kinetic energy absorbed can be increased by up to 30% compared with NCA1 series, and the life of cushionsealing ring can be prolonged by about 5 times.
5. The downward bending of piston rod is about 5-10% less than that of NCA1 series.
6. Installation size is the same as NCA1 series.
7. In addition to Rc, there are NPT threads and G threads.

Symbol

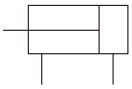

Ordering code

N C D A 2 L + 50 + 100 J N M9B +

Built in magnetic ring

Blank	No built-in magnetic ring
D	Built in magnetic ring

Installation form

B	Basic
L	Axial foot
F	Rod flange
G	Head flange
C	Single clevis
D	Double clevis
T	Center trunnion

Tube material

Blank	Aluminum tube
F*	Steel tube

*Not available with auto switch.

Bore size

40	40mm
50	50mm
63	63mm
80	80mm
100	100mm

Thread type

Blank	Rc
TN	NPT
TF	G

Stroke

See itinerary list for details

Suffix (Rod boot)

Blank	None
J	Nylon tarpaulin
K	Heat resistant tarpaulin

Suffix (Cushion)

Blank	Air cushion
N	Rubber bumper

Magnetic switch type

Blank	Without magnetic switch

*Refer to tour/magnetic switch model list for magnetic switch model
*No built-in magnetic ring cylinder no such item

Number of magnetic switches

Blank	2 pcs.
S	1 pc.
3	3 pcs.
N	"n" pcs.

Stroke/magnetic switch selection

Bore size (mm)	Standard stroke [Note 1] (mm)	Magnetic switch type [Note 2]		Magnetic switch installation parts	
		Rod installation		M9$^{N}_{B}$	only A54
40	25,50,75,100,125,150,175,200,250,300,350,400,450,500	M9N M9P M9B		BA7-040	BT-04
50	25,50,75,100,125,150,175,200,250,300,350,400,500,600		A54	BA7-063	BT-06
63					
80	25,50,75,100,125,150,175,200,250,300,350,400,450, 500,600,700			BA7-080	BT-08
100					

[Note 1] There non standard stroke; [Note 2] Wire length mark: blank -0.5m, L-3m, Z-5m.

Dimensions

Basic type With rod boot

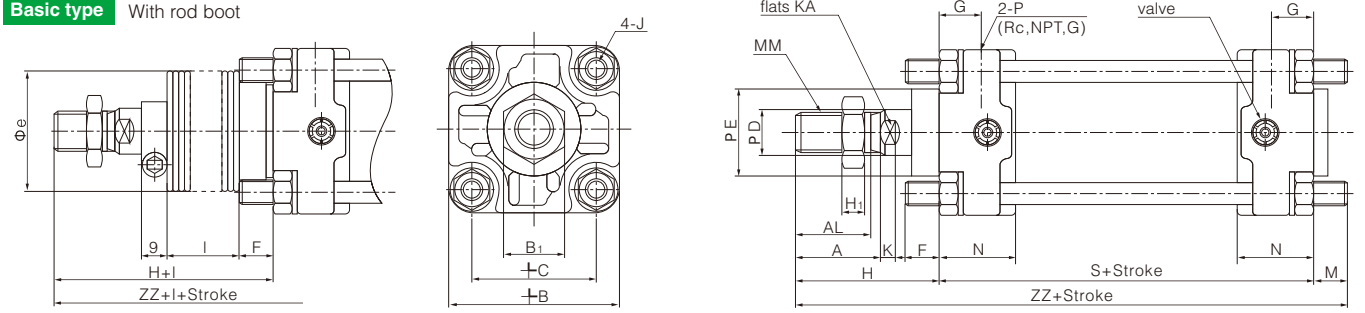

Bore size (mm)	Stroke range (mm)		A	AL	+B	B1	+C	D	E	F	G	H1	J	K	KA	M	MM	N	P	S	Without rod boot		With rod boot					
	Without rod boot	With rod boot																				H	ZZ	E	f	h	I	ZZ
40	~500	20~500	30	27	60	22	44	16	32	10	15	8	M8×1.25	6	14	11	M14×1.5	27	1/4	84	51	146	43	11.2	59	1/4 Stroke	154
50	~600	20~600	35	32	70	27	52	20	40	10	17	11	M8×1.25	7	18	11	M18×1.5	30	3/8	90	58	159	52	11.2	66	1/4 Stroke	167
63	~600	20~600	35	32	85	27	64	20	40	10	17	11	M10×1.5	7	18	14	M18×1.5	31	3/8	98	58	170	52	11.2	66	1/4 Stroke	178
80	~750	20~750	40	37	102	32	78	25	52	14	21	13	M12×1.75	10	22	17	M22×1.5	37	1/2	116	71	204	65	12.5	80	1/4 Stroke	213
100	~750	20~750	40	37	116	41	92	30	52	14	21	16	M12×1.75	10	26	17	M26×1.5	40	1/2	126	72	215	65	14	81	1/4 Stroke	224

Basic type

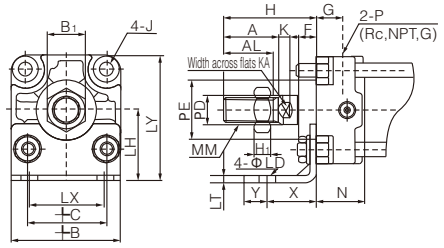

Flange type

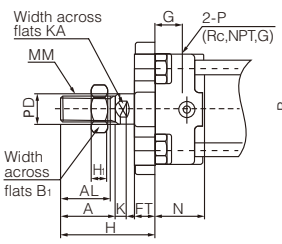

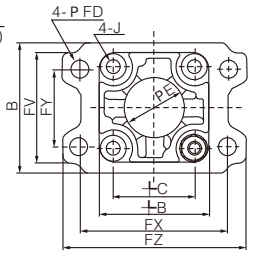

Single earrings type

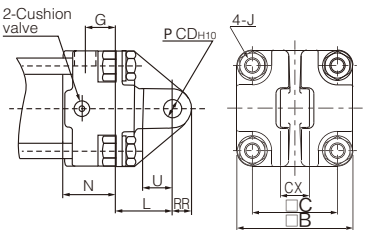

Bore size (mm)	Foot seat								Flange								Single earrings					
	Part number	LH	LX	LY	X	Y	LT	LD	Part number	FT	FD	B	FV	FX	FY	FZ	Part number	CD	U	L	RR	CX
40	NCA2-L04	40	42	70	27	13	3.2	9	NCA2-F04	12	9	71	60	80	42	100	NCA2-C04	$10^{+0.058}_{0}$	16	30	10	$15^{-0.1}_{-0.3}$
50	NCA2-L05	45	50	80	27	13	3.2	9	NCA2-F05	12	9	81	70	90	50	110	NCA2-C05	$12^{+0.07}_{0}$	19	35	12	$18^{-0.1}_{-0.3}$
63	NCA2-L06	50	59	93	34	16	3.2	11.5	NCA2-F06	15	11.5	101	86	105	59	130	NCA2-C06	$16^{+0.07}_{0}$	23	40	16	$25^{-0.1}_{-0.3}$
80	NCA2-L08	65	76	116	44	16	4.5	13.5	NCA2-F08	18	13.5	119	102	130	76	160	NCA2-C08	$20^{+0.084}_{0}$	28	48	20	$31.5^{-0.1}_{-0.3}$
100	NCA2-L10	75	92	133	43	17	6.0	13.5	NCA2-F10	18	13.5	133	116	150	92	180	NCA2-C10	$25^{+0.084}_{0}$	36	58	25	$35.5^{-0.1}_{-0.3}$

Note: The size is not specified to be the same as the basic type.

Binaural ring type

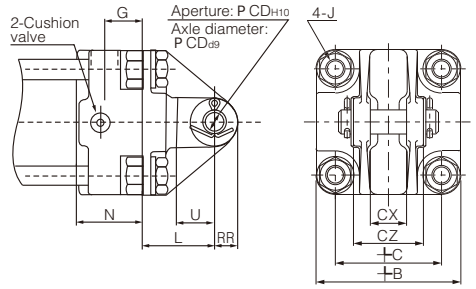

Intermediate trunnion type

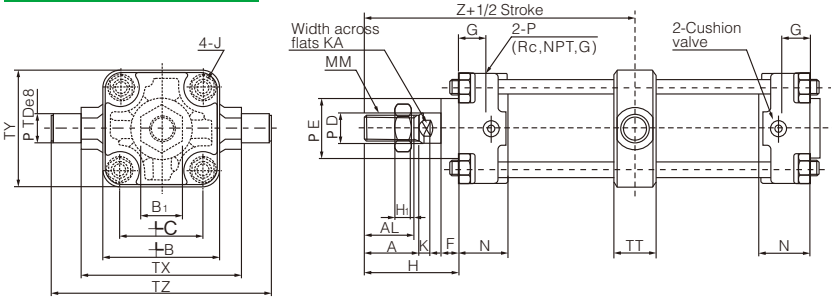

Bore size (mm)	Double Earrings							Middle Trunnion					
	Part number	CD	U	L	RR	CX	CZ	TY	TD	TX	TZ	TT	Part number
40	NCA2-D04	$10^{+0.058}_{0}$	16	30	10	$15^{+0.1}_{+0.3}$	29.5	62	$15^{-0.032}_{-0.059}$	85	117	22	NCA2-S04
50	NCA2-D05	$12^{+0.07}_{0}$	19	35	12	$18^{+0.1}_{+0.3}$	38	74	$15^{-0.032}_{-0.059}$	95	127	22	NCA2-S05
63	NCA2-D06	$16^{+0.07}_{0}$	23	40	16	$25^{+0.1}_{+0.3}$	49	90	$28^{-0.032}_{-0.059}$	110	148	28	NCA2-S06
80	NCA2-D08	$20^{+0.084}_{0}$	28	48	20	$31.5^{+0.1}_{+0.3}$	61	110	$25^{-0.040}_{-0.073}$	140	192	34	NCA2-S08
100	NCA2-D10	$25^{+0.084}_{0}$	36	58	25	$35.5^{+0.1}_{+0.3}$	64	130	$25^{-0.040}_{-0.073}$	162	214	40	NCA2-S10

Trunnion pivot bracket Material: Cast iron

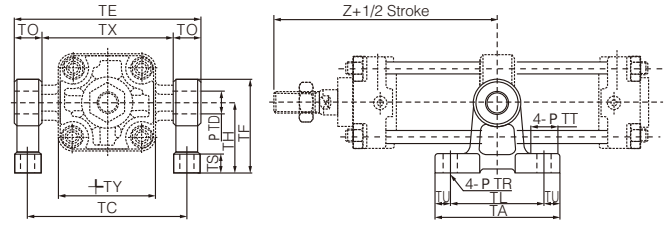

" This group of drawings is referring to the reference, trunnions with pedestals ordered separately.

Double clevis pivot bracket Material: Cast iron

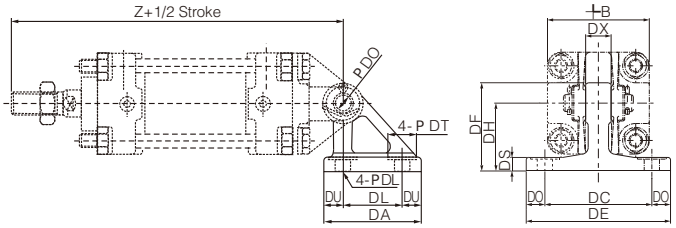

Rotating angle

Bore size	A°	B°	A°+B°+90°
40 ~ 100	12°	60°	162°

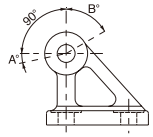

Note: This set of drawings refers to the reference.
The earrings are ordered separately with pedestals.

Model	Bore size	TA	TL	TU	TC	TX	TE	TO	TR	TT	TS	TH	TF	TY	Z	TD-H10(Hole)
NCA2-S04	40	80	60	10	102	85	119	17	9	17	12	45	60	62	93	$15^{+0.070}_{0}$
	50	80	60	10	112	95	129	17	9	17	12	45	60	74	103	$15^{+0.070}_{0}$
NCA2-S06	63	100	70	15	130	110	150	20	11	22	14	55	73	90	107	$28^{+0.070}_{0}$
NCA2-S10	80	120	90	15	166	140	192	26	13.5	24	17	75	100	110	129	$25^{+0.084}_{0}$
	100	120	90	15	188	162	214	26	13.5	24	17	75	100	130	135	$25^{+0.084}_{0}$

Model	Bore size	DA	DL	DU	DC	DX	DE	DO	DR	DT	DS	DH	DF	B	Z	DD-H10(Hole)
NCA2-B04	40	57	35	11	65	15	85	10	9	17	8	40	52	60	165	$10^{+0.058}_{0}$
NCA2-B05	50	57	35	11	65	18	85	10	9	17	8	40	52	70	183	$12^{+0.070}_{0}$
NCA2-B06	63	67	40	13.5	80	25	105	12.5	11	22	10	50	66	85	196	$16^{+0.070}_{0}$
NCA2-B08	80	93	60	16.5	100	31.5	130	15	13.5	24	12	65	90	102	235	$20^{+0.084}_{0}$
NCA2-B10	100	93	60	16.5	100	35.5	130	15	13.5	24	12	65	90	116	256	$25^{+0.084}_{0}$

Y type double knuckle joint

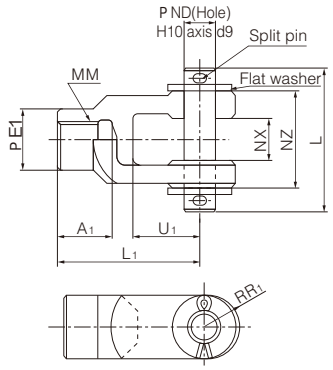

Material: Cast iron

Model	Applicable bore size	A1	E1	L1	MM	RR1	U1	ND	NX	NZ	L	Split pin size	Flat washer size
Y-04D	40	22	24	55	M14×1.5	13	25	12	$16^{+0.3}_{+0.1}$	38	55.5	Φ3×18ℓ	Polished round 12
Y-05D	50·63	27	28	60	M18×1.5	15	27	12	$16^{+0.3}_{+0.1}$	38	55.5	Φ3×18ℓ	Polished round 12
Y-08D	80	37	36	71	M22×1.5	19	28	18	$28^{+0.3}_{+0.1}$	55	76.5	Φ4×25ℓ	Polished round 18
Y-10D	100	37	40	83	M26×1.5	21	38	20	$30^{+0.3}_{+0.1}$	61	83	Φ4×30ℓ	Polished round 20

*Pin shafts, open pins and flat washers are used for elbow joints.

Clevis Pin/Knuckle Pin

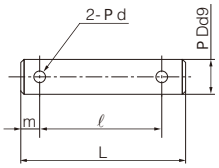

Material: Carbon steel

Model	Applicable bore size		Dd9	L	ℓ	m	d Drill through	Included split pin	Included flat washer
	Clevis	Knuckle							
CDP-2A	40	-	$10^{-0.040}_{-0.076}$	46	38	4	3	P 3×18ℓ	Polished round 10
CDP-3A	50	40·50·63	$12^{-0.050}_{-0.093}$	55.5	47.5	4	3	P 3×18ℓ	Polished round 12
CDP-4A	63	-	$16^{-0.050}_{-0.093}$	71	61	5	4	P 4×25ℓ	Polished round 16
CDP-5A	-	80	$18^{-0.050}_{-0.093}$	76.5	66.5	5	4	P 4×25ℓ	Polished round 18
CDP-6A	80	100	$20^{-0.065}_{-0.117}$	83	73	5	4	P 4×30ℓ	Polished round 20
CDP-7A	100	-	$25^{-0.065}_{-0.117}$	88	78	5	4	P 4×36ℓ	Polished round 24

I Type Single Knuckle Joint

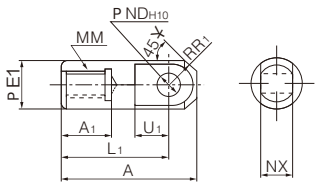

Material: Free cutting sulfur steel

Model	Applicable bore size	A	A1	E1	L1	MM	R1	U1	NDH10	NX
I-04A	40	69	22	24	55	M14×1.5	15.5	20	$12^{+0.070}_{0}$	$16^{-0.1}_{-0.3}$
I-05A	50·63	74	27	28	60	M18×1.5	15.5	20	$12^{+0.070}_{0}$	$16^{-0.1}_{-0.3}$
I-08A	80	91	37	36	71	M22×1.5	22.5	26	$18^{+0.070}_{0}$	$28^{-0.1}_{-0.3}$
I-10A	100	105	37	40	83	M26×1.5	24.5	28	$20^{+0.084}_{0}$	$30^{-0.1}_{-0.3}$

术竖螗殳(柯决袢士)

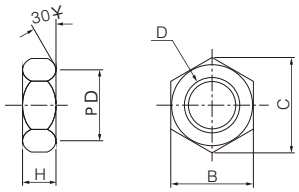

Material: Rolled steel

Model	Applicable bore size	d	H	B	C	D
NT-04	40	M14×1.5	8	22	25.4	21
NT-05	50·63	M18×1.5	11	27	31.2	26
NT-08	80	M22×1.5	13	32	37.0	31
NT-10	100	M26×1.5	16	41	47.3	39

Specifications

Bore size (mm)	32	40	50	63	80	100
Action	Double acting, Single rod					
Fluid	Air					
Proof pressure	1.5MPa					
Maximum operating pressure	1.0MPa					
Minimum operating pressure	0.05MPa					
Ambient and fluid temperature	Without auto switch: -10 to 70··· With auto switch: -10 to 60··· (No freezing)					
Lubricant	Not required (Non-lube)					
Piston speed	50~1000mm/s					
Stroke length tolerance (mm)	~250: $^{+1.0}_{0}$, 251~1000: $^{+1.4}_{0}$, 1001~1500: $^{+1.8}_{0}$					
Cushion	Air cushion or Rubber bumper					
Port size (Rc)	1/8	1/4		3/8		1/2
Mounting	Basic, Axial foot, Rod flange, Head flange, Single clevis, Double clevis, Center trunnion					

Symbol

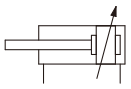

Ordering code

N M D B — B — 32 × 50 Z

Built in magnetic ring

Blank	No built-in magnetic ring
D	Built in magnetic ring

Installation form

B	Basic type

Stroke

Bore size

Example of ordering

1) required cylinder diameter: 32, stroke: 50, basic type, with magnetic ring
   Correct model: NMDBB32-50Z
2) required cylinder diameter: 50, stroke: 100, basic type, with 2 magnetic switches Correct model:
   NMDBB50-100Z 1 cylinders
   D−M9BL Two magnetic switches
   BA7−040 Two magnetic switch mounting codes

Stroke/magnetic switch selection

Bore size (mm)	Standard stroke	Longest stroke	Magnetic switch			Magnetic switch Installation code
			Contact point	Contactless		
			2 line	2 line	3 line NPN	
32	25,50,75,100,125,150,175,200,250,300,350,400,450,500	700	3C-D-A93 (V)L	D-M9B (V)L	D-M9N (V)L	BMB5-032
40		800				
50	25,50,75,100,125,150,175,200,250,300,350,400,450,500,600	1000				BA7-040
63						
80	25,50,75,100,125,150,175,200,250,300,350,400,450,500,600,700,800					BA7-063
100						

Note: The specifications and characteristics of magnetic switches can be referred to the series of magnetic switches. The applicable voltage of magnetic switches in the table is DC24V.

Dimensions

Basic type

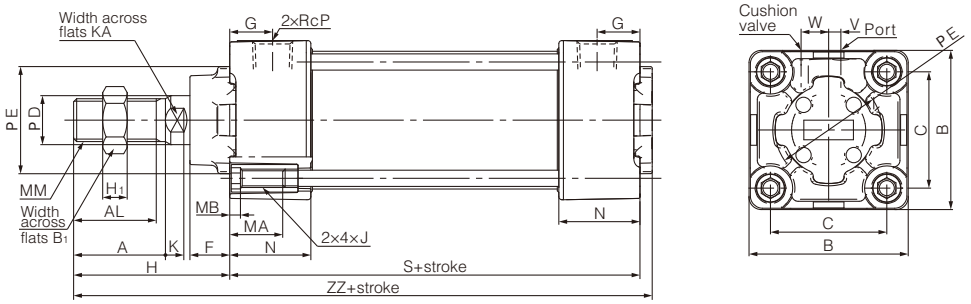

Bore size	Stroke range	A	AL	B	B1	C	D	E	F	G	H	H1	J	K	KA	MA	MB	MM	N	P	S	V	W	ZZ
32	~700	22	19.5	46	17	32.5	12	30	13	13	47	6	M6×1.0	6	10	16	4	M10×1.25	26.5	1/8	84	4	6.5	135
40	~800	30	27	52	22	38	16	35	13	14	51	8	M6×1.0	6	14	16	4	M14×1.5	26.5	1/4	84	4	9	139
50	~1000	35	32	65	27	46.5	20	40	14	15.5	58	11	M8×1.25	7	18	16	4	M18×1.5	31	1/4	94	5	10.5	156
63	~1000	35	32	75	27	56.5	20	45	14	16.5	58	11	M8×1.25	7	18	16	4	M18×1.5	31	3/8	94	9	12	156
80	~1000	40	37	95	32	72	25	45	20	19	72	13	M10×1.5	10	22	16	5	M22×1.5	37.5	3/8	114	11.5	14	190
100	~1000	40	37	114	41	89	30	55	20	19	72	16	M10×1.5	10	26	16	5	M26×1.5	37.5	1/2	114	17	15	190

I type Single knuckle joint

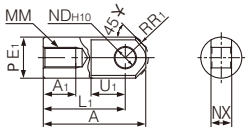

Y type double knuckle joint

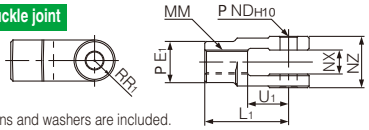

Note) Pins, slotted pins and washers are included.

Knuckle joint pin clevis pin

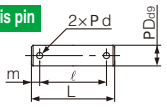

Bore size	I type Single knuckle joint										Y type double knuckle joint									Knuckle joint pin clevis pin				
	Part no.	A	A1	ΦE1	L1	MM	R1	U1	ΦND H10	NX	Part no.	ΦE1	L1	MM	R1	U1	ΦND H10	NX	NZ	Part no.	P D	L	ℓ	mm	P d
32	I-03M	40	14	20	30	M10 1.25	12	16	$10^{+0.058}_{0}$	$14^{-0.10}_{-0.30}$	Y-03M	20	30	M10 1.25	10	16	$10^{+0.058}_{0}$	$14^{+0.30}_{+0.10}$	$28^{-0.10}_{-0.30}$	CD-M03	$10^{-0.040}_{-0.076}$	44	36	4	3
40	I-04M	50	19	22	40	M14 1.5	12.5	19	$10^{+0.058}_{0}$	$14^{-0.10}_{-0.30}$	Y-04M	22	40	M14 1.5	11	19	$10^{+0.058}_{0}$	$14^{+0.30}_{+0.10}$	$28^{-0.10}_{-0.30}$	CD-M03	$10^{-0.040}_{-0.076}$	44	36	4	3
50,63	I-05M	64	24	28	50	M18 1.5	16.2	24	$14^{+0.070}_{0}$	$20^{-0.10}_{-0.30}$	Y-05M	28	50	M18 1.5	14	24	$14^{+0.070}_{0}$	$20^{+0.30}_{+0.10}$	$40^{-0.10}_{-0.30}$	CD-M05	$14^{-0.050}_{-0.093}$	60	51	4.5	4
80	I-08M	80	26	40	60	M22 1.5	23.5	34	$22^{+0.084}_{0}$	$30^{-0.10}_{-0.30}$	Y-08M	40	65	M22 1.5	20	34	$22^{+0.084}_{0}$	$30^{+0.30}_{+0.10}$	$60^{-0.10}_{-0.30}$	CD-M08	$22^{-0.065}_{-0.117}$	82	72	5	4
100	I-10M	80	26	40	60	M26 1.5	23.5	34	$22^{+0.084}_{0}$	$30^{-0.10}_{-0.30}$	Y-10M	40	65	M26 1.5	20	34	$22^{+0.084}_{0}$	$30^{+0.30}_{+0.10}$	$60^{-0.10}_{-0.30}$	CD-M08	$22^{-0.065}_{-0.117}$	82	72	5	4

Axial foot

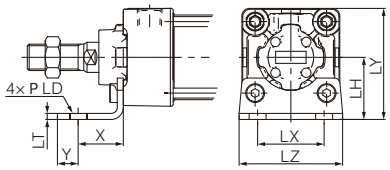

Rod flange

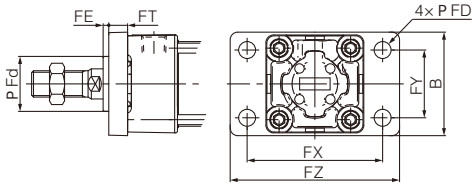

Single clevis

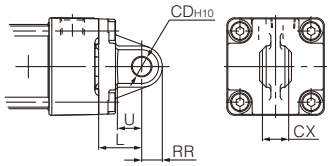

Bore size	Axial foot									Rod flange									Single clevis					
	Part no.	X	Y	ΦLD	LH	LT	LX	LY	LZ	Part no.	B	ΦFD	FE	FT	FX	FY	FZ	Fd	Part no.	L	RR	U	ΦCDH10	CX
32	NMB-L03	22	9	7	30	3.2	32	53	50	NMB-F03	50	7	3	10	64	32	79	24.5	NMB-C03	23	10.5	13	$10^{+0.058}_{0}$	$14^{-0.10}_{-0.30}$
40	NMB-L04	24	11	9	33	3.2	38	59	55	NMB-F04	55	9	3	10	72	36	90	30.5	NMB-C04	23	11	13	$10^{+0.058}_{0}$	$14^{-0.10}_{-0.30}$
50	NMB-L05	27	11	9	40	3.2	46	72.5	70	NMB-F05	70	9	2	12	90	45	110	36.5	NMB-C05	30	15	17	$14^{+0.070}_{0}$	$20^{-0.10}_{-0.30}$
63	NMB-L06	27	14	12	45	3.6	56	82.5	80	NMB-F06	80	9	2	12	100	50	120	39.5	NMB-C06	30	15	17	$14^{+0.070}_{0}$	$20^{-0.10}_{-0.30}$
80	NMB-L08	30	14	12	55	4.5	72	102.5	100	NMB-F08	100	12	4	16	126	63	153	39.5	NMB-C08	42	23	26	$22^{+0.084}_{0}$	$30^{-0.10}_{-0.30}$
100	NMB-L10	32	16	14	65	4.5	89	122	120	NMB-F10	120	14	4	16	150	75	178	46.5	NMB-C10	42	23	26	$22^{+0.084}_{0}$	$30^{-0.10}_{-0.30}$

Double clevis

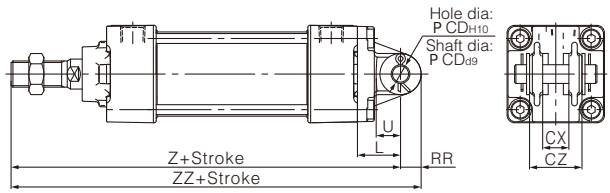

Double clevis pivot bracket

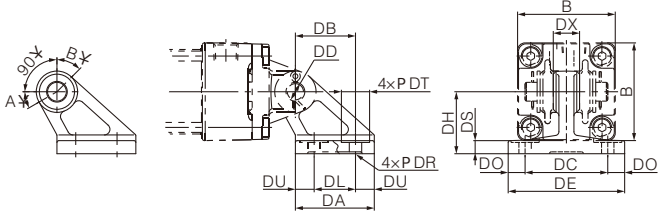

Bore size	Double clevis									Double clevis pivot bracket														
	Part no.	L	RR	U	ΦCDH10	ΦCDd9	CX	CZ	Z	ZZ	Part no.	B	DA	DB	DL	DU	DC	DX	DE	DO	P DR	P DT	DS	DH	P DD	A¥	B¥
32	NMB-D03	23	10.5	13	$10^{+0.058}_{0}$	$10^{-0.040}_{-0.076}$	$14^{+0.3}_{+0.1}$	28	154	164.5	NMB-B03	46	42	32	22	10	44	14	62	9	6.6	15	7	33	$10^{+0.058}_{0}$	25¥	45¥
40	NMB-D04	23	11	13	$10^{+0.058}_{0}$	$10^{-0.040}_{-0.076}$	$14^{+0.3}_{+0.1}$	28	158	169	NMB-B03	52	42	32	22	10	44	14	62	9	6.6	15	7	33	$10^{+0.058}_{0}$	25¥	45¥
50	NMB-D05	30	15	17	$14^{+0.070}_{0}$	$14^{-0.050}_{-0.093}$	$20^{+0.3}_{+0.1}$	40	182	197	NMB-B05	65	53	43	30	11.5	60	20	81	10.5	9	18	8	45	$14^{+0.070}_{0}$	40¥	60¥
63	NMB-D06	30	15	17	$14^{+0.070}_{0}$	$14^{-0.050}_{-0.093}$	$20^{+0.3}_{+0.1}$	40	182	197	NMB-B05	75	53	43	30	11.5	60	20	81	10.5	9	18	8	45	$14^{+0.070}_{0}$	40¥	60¥
80	NMB-D08	42	23	26	$22^{+0.084}_{0}$	$22^{-0.065}_{-0.117}$	$30^{+0.3}_{+0.1}$	60	228	251	NMB-B08	95	73	64	45	14	86	30	111	12.5	11	22	10	65	$22^{+0.084}_{0}$	30¥	55¥
100	NMB-D10	42	23	26	$22^{+0.084}_{0}$	$22^{-0.065}_{-0.117}$	$30^{+0.3}_{+0.1}$	60	228	251	NMB-B08	114	73	64	45	14	86	30	111	12.5	11	22	10	65	$22^{+0.084}_{0}$	30¥	55¥

Center trunnion

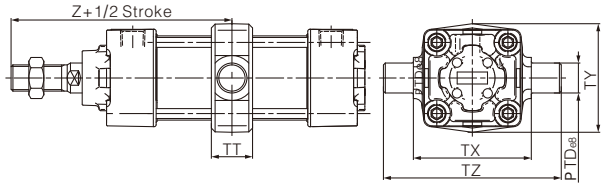

Trunnion pivot bracket

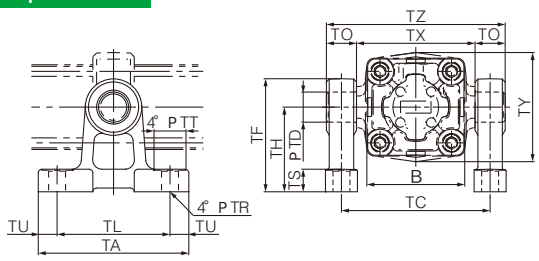

Bore size	Center trunnion							Trunnion pivot bracket													
	Cylinder with trunnion type	ΦTDe8	TT	TX	TY	TZ	Z	Part no.	TA	TL	TU	TC	TX	TE	TO	ΦTR	ΦTT	TS	TH	TF	B	ΦTDH10
32	NM-BT32-Stroke Z	$12^{-0.032}_{-0.059}$	17	50	49	74	89	NMB-S03	62	45	8.5	62	50	74	12	7	13	10	35	47	46	$12^{+0.070}_{0}$
40	NM-BT40-Stroke Z	$16^{-0.032}_{-0.059}$	22	63	58	95	93	NMB-S04	80	60	10	80	63	97	17	9	17	12	45	60	52	$16^{+0.070}_{0}$
50	NM-BT50-Stroke Z	$16^{-0.032}_{-0.059}$	22	75	71	107	105	NMB-S04	80	60	10	92	75	109	17	9	17	12	45	60	65	$16^{+0.070}_{0}$
63	NM-BT63-Stroke Z	$20^{-0.040}_{-0.073}$	28	90	87	130	105	NMB-S06	100	70	15	110	90	130	20	11	22	14	60	80	75	$20^{+0.084}_{0}$
80	NM-BT80-Stroke Z	$20^{-0.040}_{-0.073}$	34	110	110	150	129	NMB-S06	100	70	15	130	110	150	20	11	22	14	60	80	95	$20^{+0.084}_{0}$
100	NM-BT100-Stroke Z	$25^{-0.040}_{-0.073}$	40	132	136	182	129	NMB-S10	120	90	15	158	132	184	26	13.5	24	17	75	100	114	$25^{+0.084}_{0}$

Product feature

QGA and QGB series cylinders are commonly used in the pneumatic industry in China. QGA without buffer, QGB with buffer. After years of manufacturing and continuous improvement, it has good performance and reliable quality, and is widely used in all walks of life.

Ordering code

QGB | 125 × 200 | S | MF1

Model

QGA	No buffer type
QGB	Buffer type

Bore size

63
80
100
125
160
200
250
320

Stroke

Magnet code

Blank	Without magnet
S	With magnet

Magnet code

Blank	Basic type
MF1	Front flange type
MF2	Rear flange type
MP4	Tail uniaural
MP2	Tail binaural
MS1	Pedestal type
MT4	Middle pin type

Specifications

Bore size(mm)	63	80	100	125	160	200	250	320
Working Pressure Range	0.1~1.0MPa							
Guarantee Pressure Resistance	1.5MPa							
Speed range	50~700mm/s							
Use temperature range	-25-80℃ (without freezing)							
Working medium	Purification of Compressed Air Containing Oil Mist							
lubrication	Mist oil lubrication							
Maximum stroke	800	1000		2000				

Dimensions

Basic type

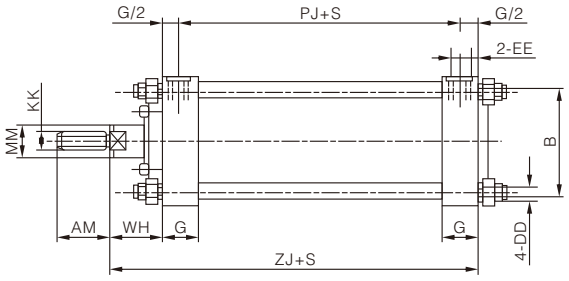

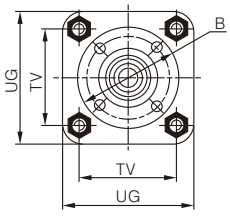

Front flange type (MF1)

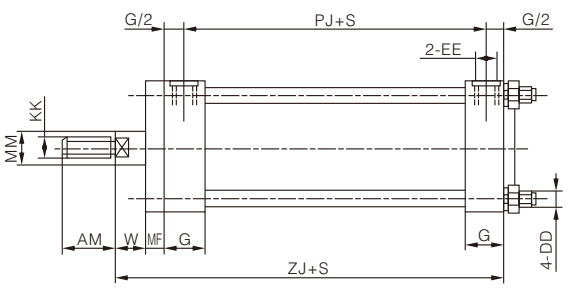

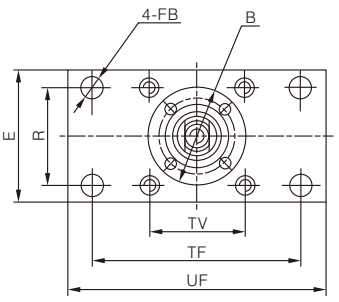

Rear flange type (MF2)

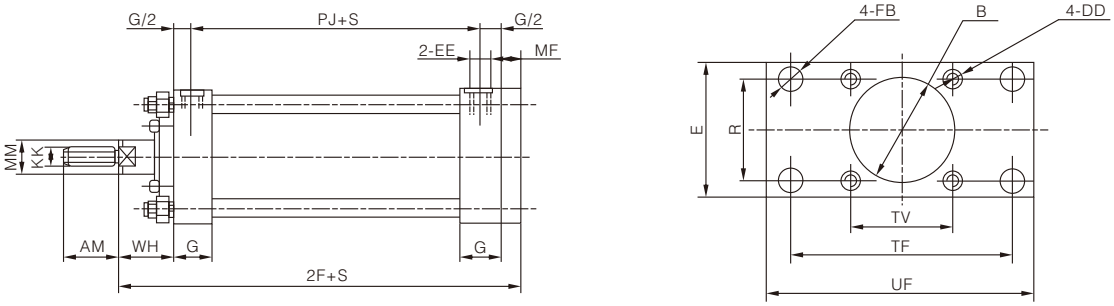

Pedestal type (MS1)

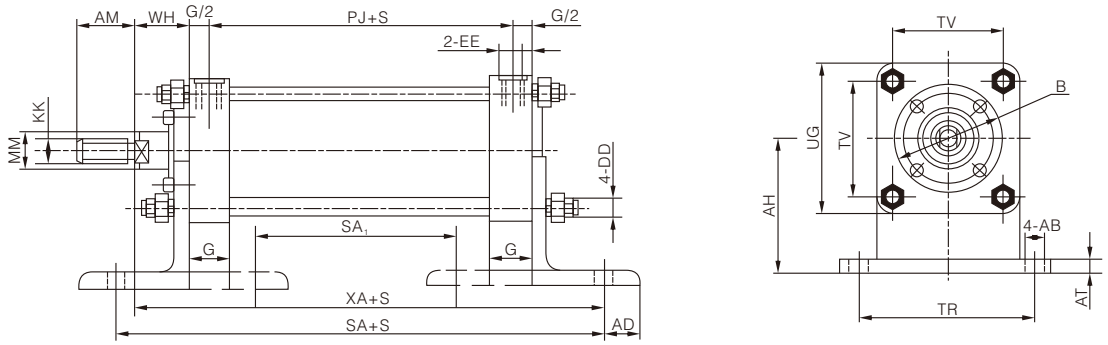

Middle pin type (MT4)

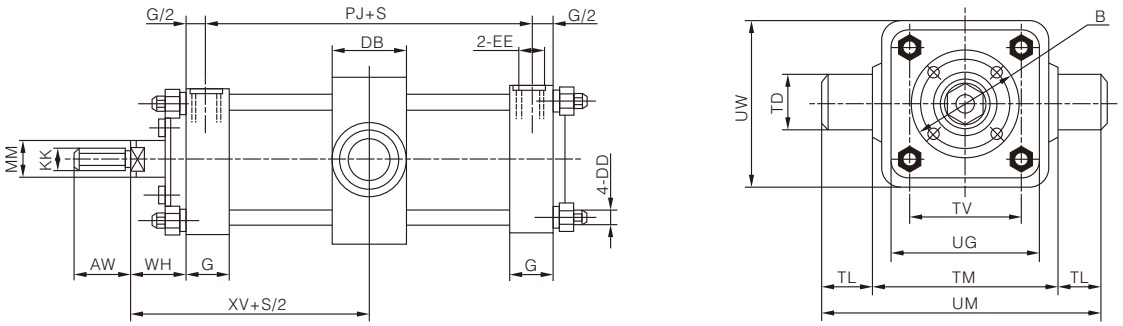

Tail uniaural (MP4)
Tail binaural (MP2)

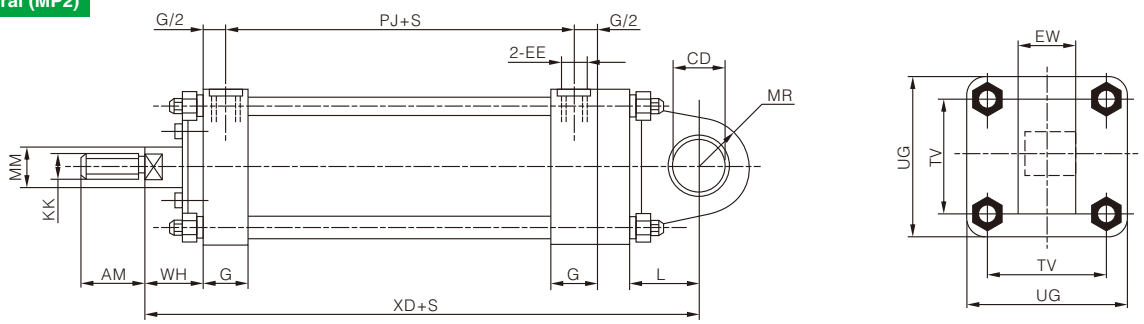

Note: there are a variety of other forms, Not listed here

Outline dimension table

Bore size \ Symbol / Dimensions	AM		B		DD		EE		G		KK		MM	
	′	″ *	P′ *	P″	′	″	′	″ *	′	″	′	″ *	P′	P″ *
63	30	30	59	63	M8	M8	M12×1.25	1/4	25	25	M16×1.5	M12×1.25	20	20
80	30	30	59	63	M8	M8	M16×1.5	1/4	28	25	M16×1.5	M12×1.25	20	20
100	35	35	64	80	M10	M10	M16×1.5	1/2	28	25	M20×1.5	M16×1.5	25	25
125	40	40	68	80	M12	M12	M20×1.5	1/2	38	25	M27×2	M16×1.5	32	25
160	70	70	78	100	M16	M16	M27×2	1/2	40	45	M33×2	M20×1.5	40	40
200	70	70	78	100	M16	M16	M27×2	1/2	50	45	M36×2	M20×1.5	40	40
250	84	70	126	125	M24	M24	M33×2	3/4	54	50	M42×2	M27×1.5	50	50
320	90	-	144	200	M30	M30	M33×2	3/4	54	60	M48×2	-	70	-
400	90	-	180	250	M36	M36	M42×2	G1	65	60	M56×4	-	80	-

Bore size \ Symbol / Dimensions	PJ*		TV		UG		WH*		ZJ*		E		FB		MF		R		TF		UF	
	′	″	′	″	′	″	′	″	′	″	′	″	P′	P″	′	″	′	″	′	″	′	″
63	105	105	56	56	80	80	30	23	160	153	80	80	9	11	14	12	60	60	100	130	120	160
80	102	105	75	70	95	95	30	23	160	153	95	95	9	13	14	16	75	75	115	145	135	180
100	107	105	90	90	115	115	33	25	168	155	115	115	11	13	16	16	90	90	140	160	165	200
125	107	105	110	110	150	150	80	25	180	155	150	150	33	17	16	20	120	120	180	200	215	240
160	150	140	145	140	190	190	80	90	225	215	190	190	17	17	20	20	150	150	230	230	270	270
200	150	140	180	180	230	230	90	90	225	215	230	230	22	21	25	25	180	190	270	280	320	340
250	140	155	225	225	280	280	108	90	302	240	280	280	26	26	28	30	165	230	330	340	395	410
320	154	-	290	280	350	350	126	-	334	-	350	350	33	33	36	40	200	280	400	420	475	500
400	175	-	350	350	430	430	104	-	344	-	430	430	39	33	40	40	-	350	500	490	570	570

Bore size \ Symbol / Dimensions	W*		ZF*		AB		AH		AO		AT		TR		SA*		SA_1*		XA*	
	′	″	′	″	P′	P″	′	″	′	″	′	″	′	″	′	″	′	″	′	″
63	16	11	174	165	9	11	55	75		20		8	60	100	210	210	62			193
80	16	7	174	169	9	13	65	85		29.5		8	75	145	210	220	62			198.5
100	23	9	184	171	11	13	75	95		29.5		8	90	150	225	220	61			200.5
125	25	5	196	175	13	17	96	115		40		10	120	190	245	250	61			215
160	25	20	245	235	17	17	120	130	-	40	-	10	150	210	320	295	80	-	-	275
200	25	15	250	240	22	21	160	160		56		14	180	260	340	313	88			284
250	80	10	330	270	26	26	165	195		56.5		16	165	320	350	407	66			343.5
320	90	-	370	-	33	33	200	250		85		20	200	350	390	-	62			-
400	64	-	384	-	39	33	-	285		85		20	-	430	420	-	100			-

Bore size \ Symbol / Dimensions	DB		TD		TM		UM		UW		XV*		CD		EW		L		MR		XD*	
	′	″	P′	P″	′	″	′	″	′	″	′	″	P′	P″	′	″	′	″	′	″	′	″
63	35	40	20	30	85	100	135	150	80	90	95	88	20	25	20	30	60	34	20	25	220	203
80	35	50	20	30	105	150	155	210	95	115	95	88	20	25	20	30	60	34	20	25	220	203
100	50	50	25	30	135	175	195	235	115	140	90.5	90	25	25	25	30	80	34	25	25	248	205
125	60	60	25	40	169	210	229	290	150	170	107.5	90	25	30	25	40	100	40	25	30	280	215
160	60	60	30	40	220	240	300	320	190	210	130	127.5	30	30	30	40	120	40	30	30	345	275
200	100	70	50	50	270	300	370	400	230	250	125	127.5	35	35	50	50	75	50	35	35	300	290
250	100	100	40	70	320	360	400	500	280	310	-	140	40	40	110	60	73	55	40	40	375	325
320	96	-	50	90	400	420	500	600	350	-	-	-	45	50	120	80	86	70	45	50	420	-
400	105	-	90	90	500	530	640	710	430	-	-	-	60	50	-	80	110	70	-	50	454	-

Product feature

QGBZ series heavy duty cylinders are single piston double acting adjustable cushion cylinders on both sides. It can replace QGA, QGB series cylinders. It has compact size and small installation space.

The main material is high quality carbon structural steel, which is durable and suitable for working under harsh conditions.

Symbol

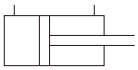

Cylinder structural schematic diagram

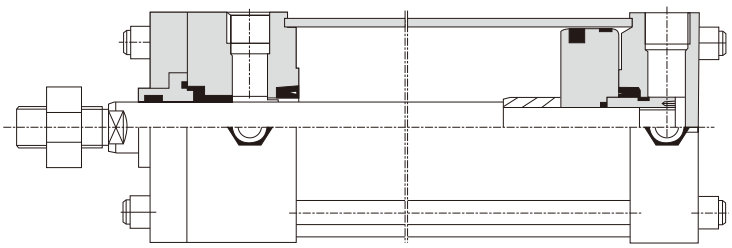

Specifications

Bore size (mm)		50	63	80	100	125	160	200	250
Maximum stroke (mm)		1400		1800		2000			
Pressure range (Mpa)		0.1~1							
Working medium		Clean and dry compressed air with oil mist							
Use speed range		50~700							
Use temperature range (℃)		-5~60							
Thread technical level		GB7073-87 6g.6H							
Theoretical sction gorce (N) (When the pressure is 0.5 MPa)	Thrust	834	1324	2135	3336	5213	8602	13440	21000
	Pull	673	1162	1927	3127	4871	8064	12902	20319
buffer		Bilateral adjustable buffer							
Use oil		Lubricating oils with viscosities of 2.5 to 7°E							
Installation form	Sign	MF1	MF2		S2	MP1	MP3		MT4
	Explain	Front flange	Rear flange		Axial tripod	Double hanging ear	Single suspended ear type		Middle pin type
Buffer stroke (mm)		16			20		23		25

Model description

QGBZ ≡ ∍ ≤ ∍ ≥

≡ Cylinder bore (mm)
≤ Cylinder stroke (mm)
≥ Cylinder installation form

Blank: Basic type
MF2: Rear flange
MF1: Front flange
S2: Axial scaffold type
MP3: Single suspended ear
MP1: Double suspension ear
MT4: Middle hinge shaft

Order description

1. QGBZ heavy-duty cylinder basic type, inner diameter is 100 mm, stroke of 120 mm,
   order model QGBZ100-120.
2. QGBZ heavy-duty cylinder with accessories, inner diameter of 100, stroke of 120 mm, installation form of S2,
   order model: QGBZ100-120-S2.

Dimensions

Basic type

P 50~P 100

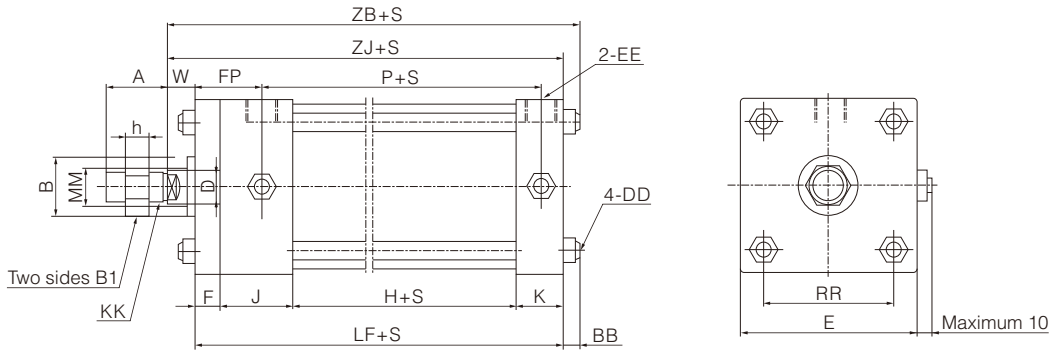

P 125~P 250

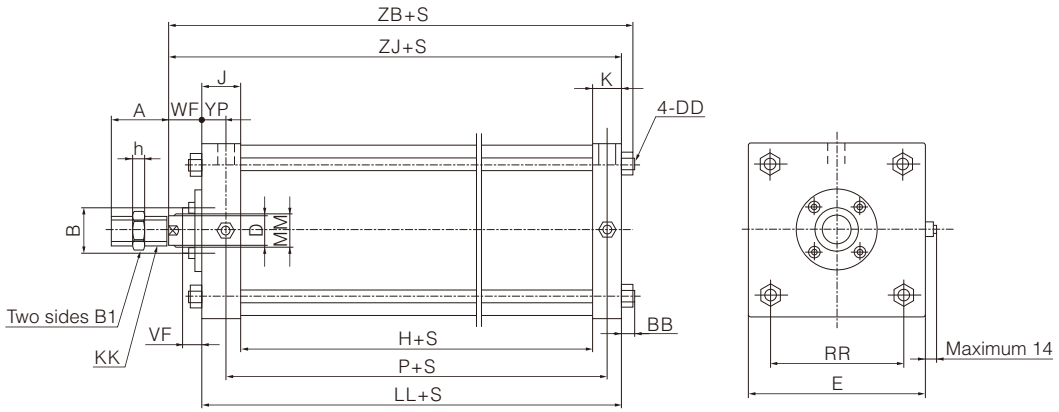

Dimensions table

Bore size (mm)	A	BΦ	B1	BB	D	DD	E	EE	F	FP	H	h	J
50	32	34	22	9.5	19	M6	□62	G1/4	10	34	35	8	35.5
63	32	34	22	10.5	19	M8	□76	G3/8	10	34	38	8	35.5
80	40	39	27	12.5	22	M10	□94	G3/8	16	43	35	10	43
100	40	39	27	12.5	22	M10	□114	G1/2	16	43	36	10	43
125	54	46	36	13	27	M12	□138	G1/2	-	-	45	13.5	41
160	72	55	50	16	36	M16	□178	G3/4	-	-	50	20	46.5
200	72	55	50	16	36	M16	□216	G3/4	-	-	50	20	46.5
250	84	60	60	19	41	M20	□270	G1	-	-	65	22	52

Bore size (mm)	KK	K	LF	LL	MMΦ	P	RR	VF	W	WF	YP	ZB	ZJ
50	M16×1.5	22.5	103	-	22	58	□47	-	15	-	-	127.5	118
63	M16×1.5	22.5	106	-	22	61	□56	-	15	-	-	131.5	121
80	M20×1.5	30	124	-	25	67	□70	-	19	-	-	155.5	143
100	M20×1.5	30	124	-	25	67	□84	-	19	-	-	155.5	143
125	M27×2	28	-	114	32	73	□104	21	-	35	27	162	149
160	M36×2	34.5	-	131	40	85	□134	25	-	41	29	188	172
200	M36×2	34.5	-	131	40	85	□163	25	-	41	29	188	172
250	M42×2	45	-	162	45	109	□202	30	-	48	30	229	210

Front flange type (MF1)

P 50~ P 100

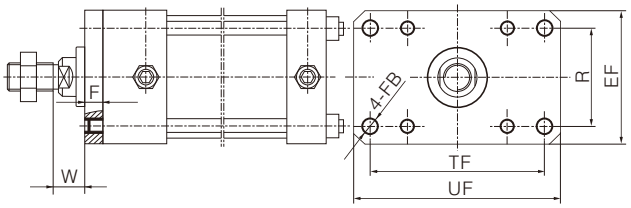

P 125~ P 250

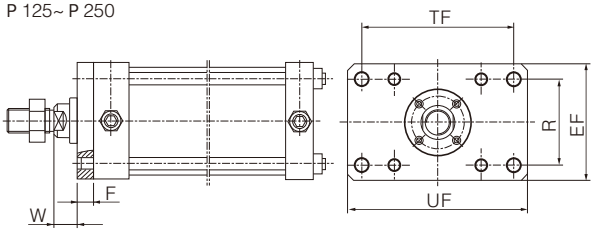

Rear flange type (MF2)

P 50~ P 100

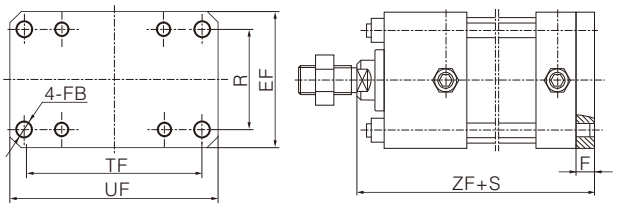

P 125~ P 250

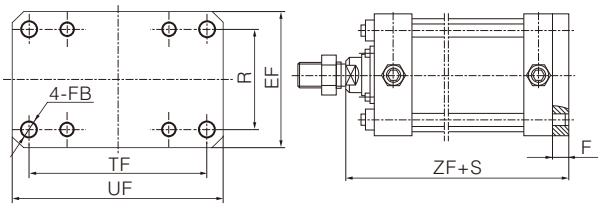

Single suspended ear (MP3)

P 50~ P 100

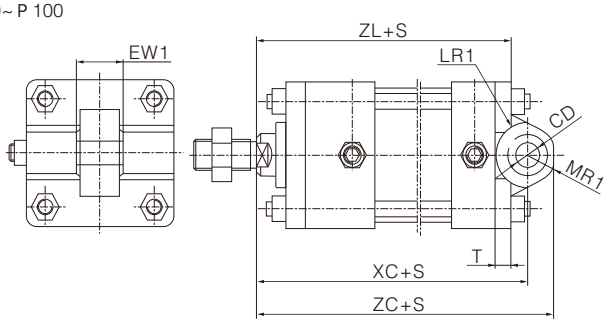

P 125~ P 250

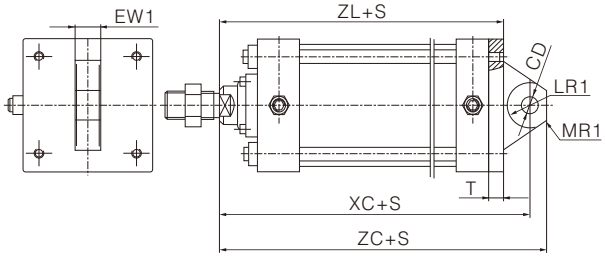

Double suspension ear (MP1)

P 50~ P 100

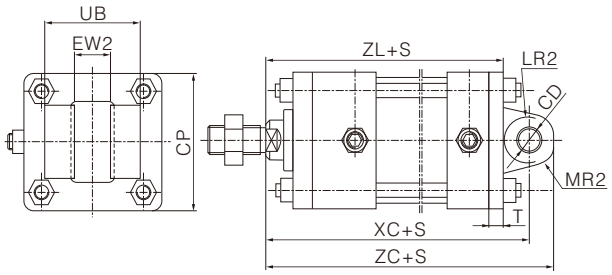

P 125~ P 250

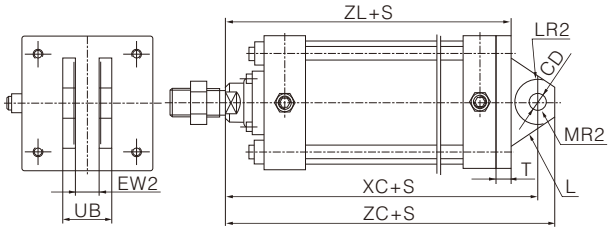

Axial scaffold type (S2)

P 50~ P 100

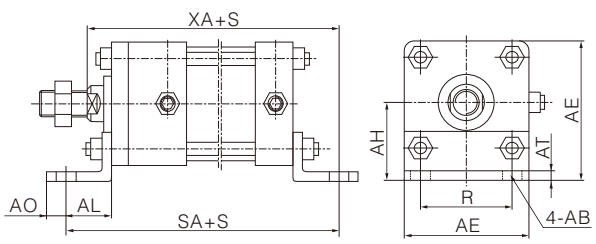

P 125~ P 250

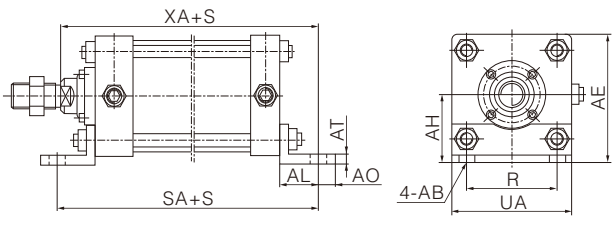

Middle hinge shaft (MT4)

P 50~ P 100

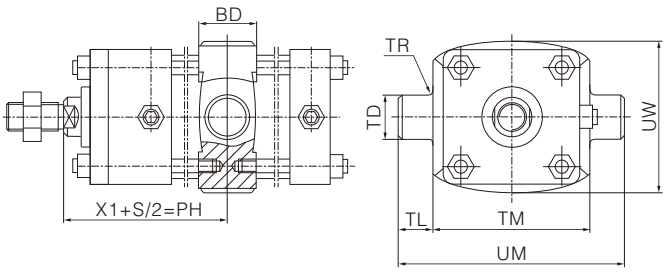

P 125~ P 250

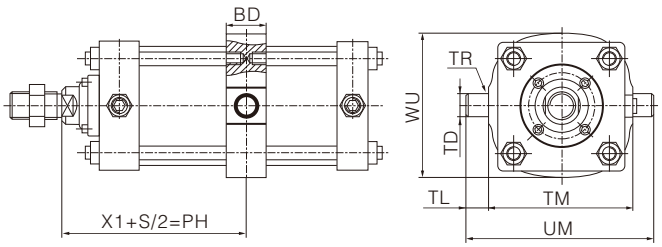

Dimensions table

Bore size (mm)	P AB	AE	AH	AL	AO	AT	R	SA	UA	XA	EF	FB	P TF	MR2
50	12	72	41	26	12	6	47	155	70	144	65	9	86	R17
63	12	86	48	28	12	6	56	162	80	149	76	9	98	R17
80	14	106	59	34	14	8	70	192	97	177	94	12	119	R23
100	14	123	66	34	14	8	84	192	114	177	114	12	138	R23
125	18	148	79	43	18	10	104	200	138	192	138	14	168	R22
160	22	187	98	50	22	10	134	231	178	222	178	18	212	R30
200	22	226	118	55	22	15	163	241	216	227	216	18	250	R30
250	26	276	141	60	24	15	202	282	270	270	270	22	312	R42

Bore size (mm)	UF	P CD	EW1	L	LR1	MR1	XC	ZC	ZL	UB	BD	EW2	LR2
50	104	14H9	$20^{0}_{-0.084}$	-	R19	R16	137	152	128	52	30	$20^{+0.7}_{+0.5}$	-
63	116	14H9	$20^{0}_{-0.084}$	-	R19	R16	140	155	134	52	30	$20^{+0.7}_{+0.5}$	-
80	143	20H9	$32^{0}_{-0.100}$	-	R26	R22	175	195	161	64	35	$32^{+0.7}_{+0.5}$	-
100	162	20H9	$32^{0}_{-0.100}$	-	R27	R22	175	195	161	64	40	$32^{+0.7}_{+0.5}$	-
125	196	20H9	$32^{0}_{-0.100}$	36	R26	R22	199	219	163	64	43	$32^{+0.7}_{+0.5}$	R26
160	248	28H9	$40^{0}_{-0.100}$	44	R32	R30	236	264	192	80	53	$40^{+0.8}_{+0.5}$	R32
200	286	28H9	$40^{0}_{-0.100}$	44	R32	R30	241	269	197	80	53	$40^{+0.8}_{+0.5}$	R32
250	356	36H9	$50^{0}_{-0.100}$	58	R46	R42	298	334	240	100	58	$50^{+0.8}_{+0.5}$	R46

Bore size (mm)	MT4 Type		P TD	TL	TM	TR	UM	UW	XI	T	W	ZF	F	T(MP3)	ZT(MP3)	ZC(MP3)
	Minimum PH	Minimum stroke														
50	78	0	25e9	25	76	R1.5	126	71	78	8	15	128	10	10	128	151
63	79.5	0	25e9	25	88	R1.5	138	86	79.5	8	15	131	10	13	134	154
80	99	7	25e9	25	114	R1.5	164	104	95.5	11	19	159	16	18	161	-
100	101.5	12	25e9	25	132	R2	182	128	95.5	11	19	159	16	18	161	-
125	101.5	6	25e9	25	158	R2	208	158	98.5	14	19	165	16	With MP1	With MP1	With MP1
160	119	13	36e9	36	200	R2	272	200	112.5	20	21	192	20	With MP1	With MP1	With MP1
200	119	13	36e9	36	246	R2	318	246	112.5	25	21	192	20	With MP1	With MP1	With MP1
250	134	0	45e9	45	304	R3	394	304	132.5	30	23	235	25	With MP1	With MP1	With MP1

Spherical single ear connector (s-type)

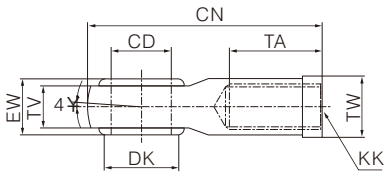

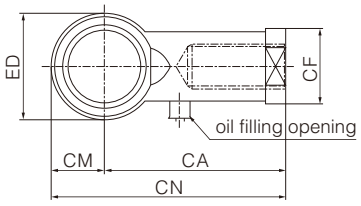

Dimensions table

Bore size (mm)	CA	CD	CF	CM	P CN	ED	EW	KK	TA	TV	TW
50	64	16h9	27	19	83	38	$21^{0}_{-0.1}$	M16×1.5	33	$15^{+0.1}_{-0.1}$	22
63	64	16h9	27	19	83	38	$21^{0}_{-0.1}$	M16×1.5	33	$15^{+0.1}_{-0.1}$	22
80	77	20h9	34	23	100	46	$25^{0}_{-0.1}$	M20×1.5	40	$18^{+0.1}_{-0.1}$	30
100	77	20h9	34	23	100	46	$25^{0}_{-0.1}$	M20×1.5	40	$18^{+0.1}_{-0.1}$	30

Single ear connector (t-type)

P 50~ P 100

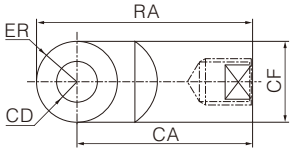

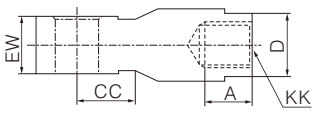

P 125~ P 250

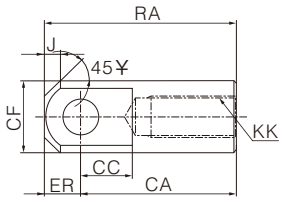

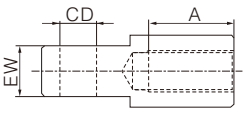

Fork pin connector (Y type)

P 50~ P 100

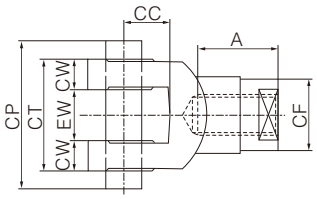

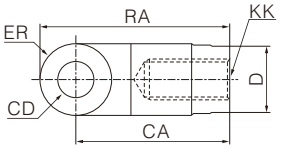

P 125~ P 250

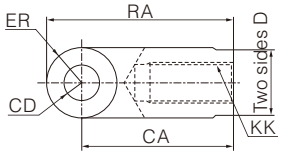

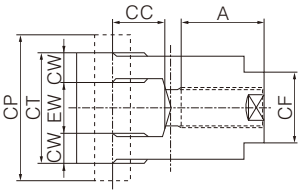

Dimensions table

Bore size (mm)	A	CA	CC		CD		CF		CP	CT	CW	D		ED(R)		EW		KK	RA
			T type	Y type	T type	Y type	T type	Y type				T type	Y type	T type	Y type	T type	Y type		
50	33	60	20	18	14H9	14H9/f8	28	28	58	44	12	26	26	14	14	$20^{0}_{-0.1}$	$20^{+1.5}_{+0.5}$	M16×1.5	74
63	33	60	20	18	14H9	14H9/f8	28	28	58	44	12	26	26	14	14	$20^{0}_{-0.1}$	$20^{+1.5}_{+0.5}$	M16×1.5	74
80	41	85	30	28	20H9	20H9/f8	36	36	78	64	16	30	30	19	19	$32^{0}_{-0.1}$	$32^{+1.5}_{+0.5}$	M20×1.5	104
100	41	85	30	28	20H9	20H9/f8	36	36	78	64	16	30	30	19	19	$32^{0}_{-0.1}$	$32^{+1.5}_{+0.5}$	M20×1.5	104
125	56	100	32	35	20H9	20H9/f8	49	40	78	64	16	-	37	20	20	$32^{0}_{-0.1}$	$32^{+1.5}_{+0.5}$	M27×2	120
160	74	125	33	36.5	28H9	28H9/f8	62	55	97	80	20	-	52	27.5	27.5	$40^{0}_{-0.1}$	$40^{+1.5}_{+0.5}$	M36×2	152.5
200	74	125	33	36.5	28H9	28H9/f8	62	55	97	80	20	-	52	27.5	27.5	$40^{0}_{-0.1}$	$40^{+1.5}_{+0.5}$	M36×2	152.5
250	86	144	48	49	36H9	36H9/f8	79	70	117	100	25	-	65	35	35	$50^{0}_{-0.1}$	$50^{+1.5}_{+0.5}$	M42×2	179

Hinged axle seat for MT4

P 50~ P 100

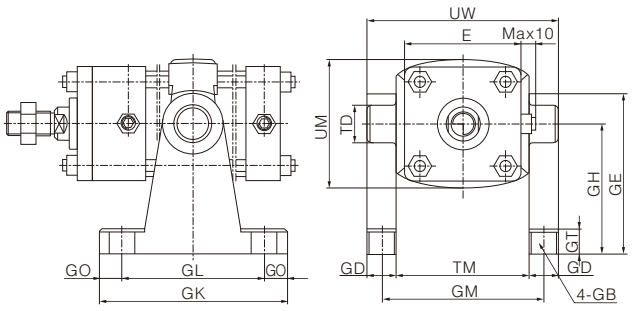

P 125~ P 250

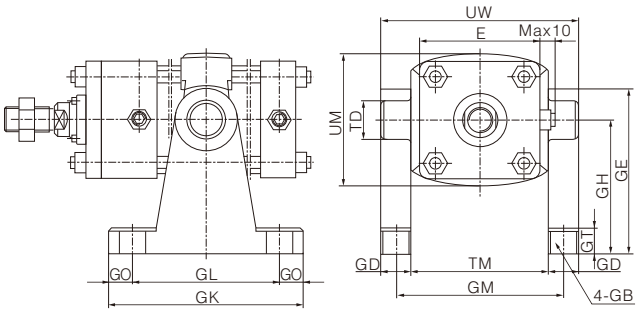

Dimensions table

Bore size (mm)	E	P GB	GD	GE	GH	GK	GL	GM	GO	GT	P TD	TM	UM	UW
50	□62	11	23	72	50	110	80	99	15	12	25H9/e9	76	126	71
63	□76	11	23	72	50	110	80	111	15	12	25H9/e9	88	138	86
80	□94	14	26	92	70	120	85	137	17.5	14	25H9/e9	114	164	104
100	□114	14	26	92	70	120	85	155	17.5	14	25H9/e9	132	182	128
125	□138	18	25	115	85	145	105	183	20	25	25H9/e9	158	208	158
160	□178	22	36	170	130	185	140	236	22.5	25	36H9/e9	200	272	200
200	□216	22	36	170	130	185	140	282	22.5	25	36H9/e9	246	318	246
250	□270	26	45	210	160	215	165	349	25	32	45H9/e9	304	394	304

Monaural seat for MP1

P 50~ P 100

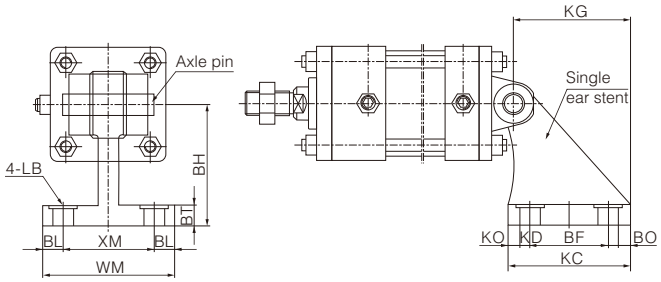

P 125~ P 250

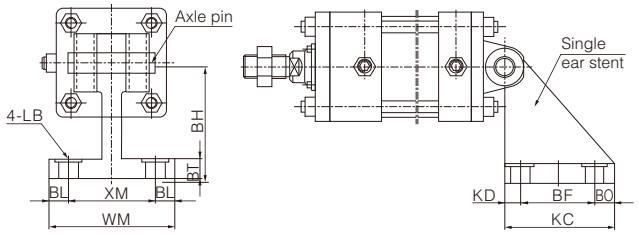

Dimensions table

Bore size (mm)	BF	BH	BL	BO	BT	KC	KD	KG	KO	P LB	WM	XM
50	40	45	12.5	15	8	70	10	65	5	11	105	80
63	40	45	12.5	15	8	70	10	65	5	11	105	80
80	65	60	15	15	12	95	5	85	10	14	135	105
100	65	60	15	15	12	95	5	85	10	14	135	105
125	77	75	17.5	17.5	14	112	17.5	-	-	18	145	110
160	120	115	22.5	22.5	23	165	22.5	-	-	22	175	130
200	120	115	22.5	22.5	23	165	22.5	-	-	22	175	130
250	165	140	25	25	28	215	25	-	-	26	220	170

Specifications

Bore size(mm)	32	40 ¨ 50	63 ¨ 80	100
Pipe size	G1/8	G1/4	G3/8	G1/2
Operation mode	Single rod double action			
Use pressure range	0.05~1.0MPa			
Environment and fluid temperature	Without magnetic switch:-10~70℃, With magnetic switch:-10~60℃			
Oil feeding	Don't need			
Piston speed	50~1000mm/s			
Stroke length tolerances (mm)	$0\sim250^{+1.0}_{0}$, $251\sim1000^{+1.4}_{0}$			
Buffer	Bilateral air cushioning			

Symbol

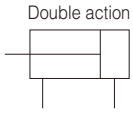

Ordering code

NCP95S D — B — 32 × 100 + Z73 +

Built in magnetic ring

Blank	No built-in magnetic ring
D	Built-in magnet ring

Installation form

B	Basic type
L	Axial pedestal type
F	Rod flange type
G	Rodless flange type
C	Single ear ring type
D	Upper earring type

Bore size

32
40
50
63
80
100

Stroke
(See table below)

Piston rod form

Blank	Single rod
W	Double rod

Magnetic switch

Blank	without magnetic switch

* Refer to the table below for the type of magnetic switch.
* No built-in magnetic ring no such item.

Number of magnetic switches

Blank	2 pcs.
S	1 pc.
n	"n" pcs.

Dimensions

Basic type

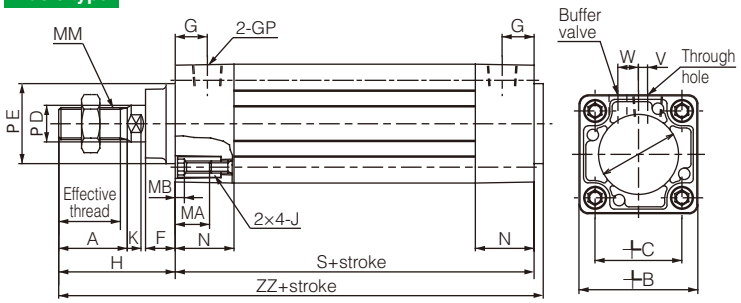

Stroke/magnetic switch model

Bore size (mm)	Standard stroke (mm)	Maximum stroke (mm)	Magnetic switch type
32	25, 50, 80, 100, 125, 160, 200, 250, 320, 400, 500	700	Z73 (Installation parts type BMP1-032)
40		800	
50¨63	25, 50, 80, 100, 125, 160, 200, 250, 320, 400, 500, 600	1200	
80	25, 50, 80, 100, 125, 160, 200, 250, 320, 400, 500, 600, 700, 800	1400	
100		1500	

Bore size(mm)	Stroke range	Effective thread length	Width on both sides	A	B	C	D	Ee11	F	G	H	MA	MB	J	K	MM	N	P	S	V	W	ZZ
32	~500	19.5	10	22	46	32.5	12	30	15	13	48	16	4	M6×1.0	6	M10×1.25	27	1/8	94	4	6.5	146
40	~500	21	13	24	52	38	16	35	17	14	54	16	4	M6×1.0	6.5	M12×1.25	27	1/4	105	4	9	163
50	~600	29	16	32	65	46.5	20	40	24	15.5	69	16	5	M8×1.25	8	M16×1.5	31.5	1/4	106	5	10.5	179
63	~600	29	16	32	75	56.5	20	45	24	16.5	69	16	5	M8×1.25	8	M16×1.5	31.5	3/8	121	9	12	194
80	~800	37	21	40	95	72	25	45	30	19	86	16	5	M10×1.5	10	M20×1.5	38	3/8	128	11.5	14	218
100	~800	37	21	40	114	89	30	55	32	19	91	16	5	M10×1.5	10	M20×1.5	38	1/2	138	17	15	233

Foot seat

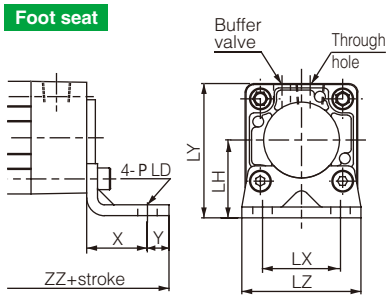

Flanged

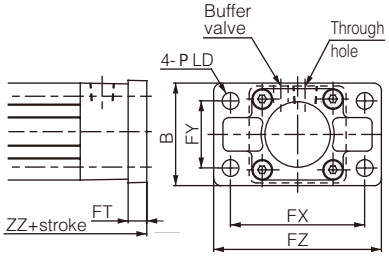

Single earrings

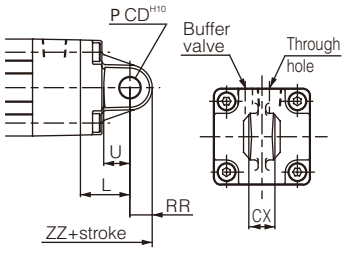

Double earrings

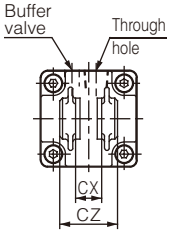

Model	Bore size (mm)	X	Y	LD	LH	LS	LT	LX	LY	LZ	ZZ
L5032	32	24	10	7	32	142	4.5	32	55	48	176
L5040	40	28	11	10	36	161	4.5	36	62	55	198
L5050	50	32	12	10	45	170	5.5	45	77.5	68	219
L5063	63	32	12	10	50	185	5.5	50	87.5	80	234
L5080	80	41	14	12	63	210	6.5	63	110.5	100	269
L5100	100	41	16	14.5	71	220	6.5	75	128	120	286

Model	Bore size (mm)	B	FD	FT	FX	FY	FZ	ZZ
F5032	32	50	7	10	64	32	79	152
F5040	40	55	9	10	72	36	90	169
F5050	50	70	9	12	90	45	110	187
F5063	63	80	9	12	100	50	120	202
F5080	80	100	12	16	126	63	153	230
F5100	100	120	14	16	150	75	178	245

Model	Bore size (mm)	L	RR	U	CD	$CX^{-0.2}_{-0.6}$	Z	ZZ	CZ
C5032	32	22	9.5	12	$10^{+0.036}_{0}$	26	164	173.5	45
C5040	40	25	12	15	$12^{+0.043}_{0}$	28	184	196	52
C5050	50	27	12	15	$12^{+0.043}_{0}$	32	202	214	60
C5063	63	32	16	20	$16^{+0.043}_{0}$	40	222	238	70
C5080	80	36	16	20	$16^{+0.043}_{0}$	50	250	266	90
C5100	100	41	20	25	$20^{+0.052}_{0}$	60	270	290	110

Specifications

Bore size(mm)	32	40	50	63	80	100	125
Action	Double acting						
Fluid	Air						
Proof pressure	1.5 MPa						
Max. operating pressure	1.0 MPa						
Min. operating pressure	0.05 MPa						
Ambient and fluid temperature	Without auto switch: -20 to 70°C (No freezing) With auto switch: -10 to 60°C (No freezing)						
* Lubrication	Not required (Non-lube)						
Operating piston speed	50~1000mm/s						50~700mm/s
Allowable stroke	0~250: $^{+1.0}_{0}$, 251~1000: $^{+1.4}_{0}$, 1001~1500: $^{+1.8}_{0}$, 1501~2000: $^{+2.2}_{0}$						
Cushion	Air cushion on both ends + Bumper cushion						Air cushion on both ends
Port size	G1/8	G1/4		G3/8		G1/2	

* If lubrication is required, Please use turbine No.1 oil ISO VG32.

Symbol

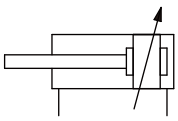

Ordering code

NCP96S D B 32 × 100 C

Built in magnetic ring

Blank	No built-in magnetic ring
D	Built-in magnet ring

Installation form

Basic type

Bore size

32
40
50
63
80
100
125

Stroke

Air cushion on both ends + Bumper cushion

Product feature

1. The overall weight of P 32~ P 100 can be reduced by 17%.
2. Rubber cushions allow travel to extend / retreat back to the end, thereby reducing impact noise.
3. Integrating air cushioning and rubber cushioning design can shorten the cushioning time.

Example of ordering

1) Required cylinder diameter: 32, stroke: 50, basic type
Correct model: NCP96SB32-50

2) Cylinder diameter required: 50, stroke: 100, magnetic switch required, pedestal mounting type
Correct model:

NCP96SDB50-100	1 Cylinders
L5050	1 Scaffolding (including 2 pedestals and 4 screws)
D-M9BL	2 Magnetic switches

Stroke/magnetic switch type table

Bore size (mm)	Standard stroke (mm)	Longest stroke (mm)	Magnetic switch			Sealed package type
			Contact point	Contactless		
			2 Wire	3 Wire	3 Wire NPN	
32	25, 50, 80, 100, 125, 160, 200, 250, 320, 400, 500	2000	3C-D-A93(V)L	D-M9B(V)L	D-M9N(V)L	CS95-32
40						CS95-40
50	25, 50, 80, 100, 125, 160, 200, 250, 320, 400, 500, 600					CS95-50
63						CS95-63
80	25, 50, 80, 100, 125, 160, 200, 250, 320, 400, 500, 600, 700, 800					CS95-80
100						CS96-100
125*	-					CS96-125

* P 125 is produced after receiving the order.

Dimensions

Basic type

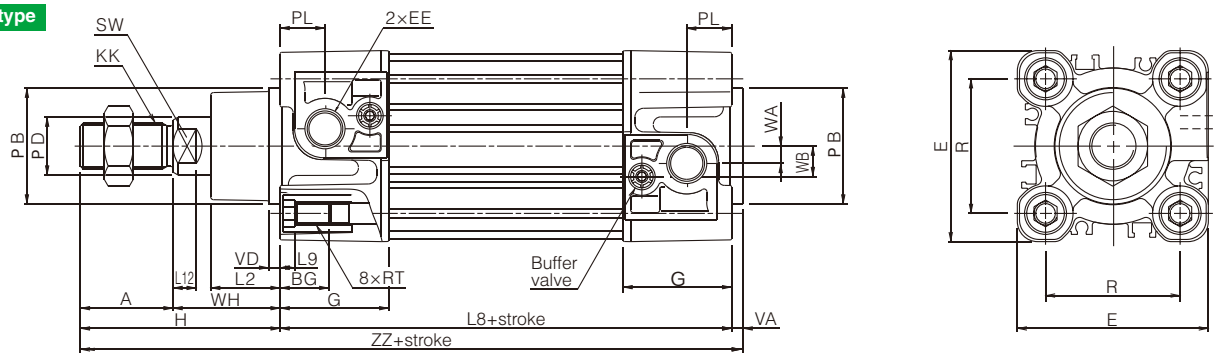

Bore size(mm)	A	P Bd11	P D	EE	PL	RT	L12	KK	SW	G	BG	L8	VD	VA	WA	WB	WH	ZZ	E	R	L2	L9	H
32	22	30	12	G1/8	13	M6×1	6	M10×1.25	10	32	16	94	4	4	4	7	26	146	47	32.5	15	4	48
40	24	35	16	G1/4	14	M6×1	6.5	M12×1.25	13	37.5	16	105	4	4	5	9	30	163	54	38	17	4	54
50	32	40	20	G1/4	15.5	M8×1.25	8	M16×1.5	17	37.5	16	106	4	4	6	10.5	37	179	66	46.5	24	5	69
63	32	45	20	G3/8	16.5	M8×1.25	8	M16×1.5	17	45	16	121	4	4	9	12	37	194	77	56.5	24	5	69
80	40	45	25	G3/8	19	M10×1.5	10	M20×1.5	22	45	17	128	4	4	11.5	14	46	218	99	72	30	-	86
100	40	55	25	G1/2	19	M10×1.5	10	M20×1.5	22	50	17	138	4	4	17	15	51	233	118	89	32	-	91
125	54	60	32	G1/2	19	M12×1.75	13	M27×2	27	58	20	160	6	6	17	15	65	285	144	110	40	-	119

Foot seat type (L)

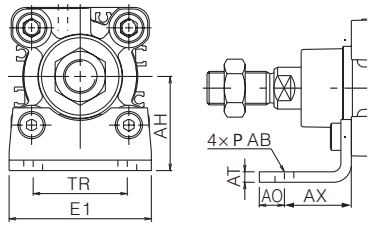

Flange type (F)

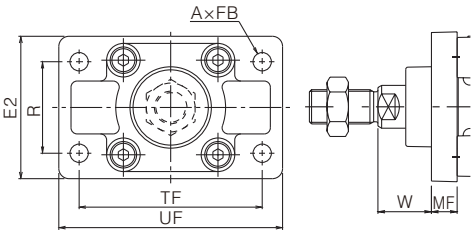

Single earring type (C)

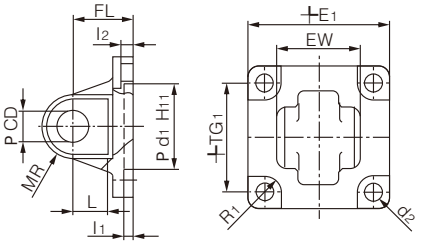

Bore size (mm)	Foot seat (L)								Flange (F)								Single earring (C)											
	Part No.*	E1	TR	AH	AO	AT	AX	P AB	Part No.	R	TF	P FB	E2	UF	W	MF	Part No.	E1	EW	TG1	FL	I1	L	I2	P d1 H11	P CD	MR	P d2	R1
32	L5032	48	32	32	10	4.5	24	7	F5032	32	64	7	50	79	16	10	C5032	45	$26^{-0.2}_{-0.6}$	32.5	22	5	12	5.5	30	10	9.5	6.6	6.5
40	L5040	55	36	36	11	4.5	28	10	F5040	36	72	9	55	90	20	10	C5040	51	$28^{-0.2}_{-0.6}$	38	25	5	15	5.5	35	12	12	6.6	6.5
50	L5050	68	45	45	12	5.5	32	10	F5050	45	90	9	70	110	25	12	C5050	64	$32^{-0.2}_{-0.6}$	46.5	27	5	15	6.5	40	12	12	9	8.5
63	L5063	80	50	50	12	5.5	32	10	F5063	50	100	9	80	120	25	12	C5063	74	$40^{-0.2}_{-0.6}$	56.5	32	5	20	6.5	45	16	16	9	8.5
80	L5080	100	63	63	14	6.5	41	12	F5080	63	126	12	100	153	30	16	C5080	94	$50^{-0.2}_{-0.6}$	72	36	5	20	10	45	16	16	11	11
100	L5100	120	75	71	16	6.5	41	14.5	F5100	75	150	14	120	178	35	16	C5100	113	$60^{-0.2}_{-0.6}$	89	41	5	25	10	55	20	20	11	12
125	L5125	Max. 157	90	90	Max. 25	8	45	16	F5125	90	180	16	Max. 157	Max. 224	45	20	C5125	Max. 157	$70^{-0.5}_{-1.2}$	110	50	7	30	10	60	25	26	13.5	10

* Contains 2 pedestals and 4 screws

Double earring type (D) With mounting bolts

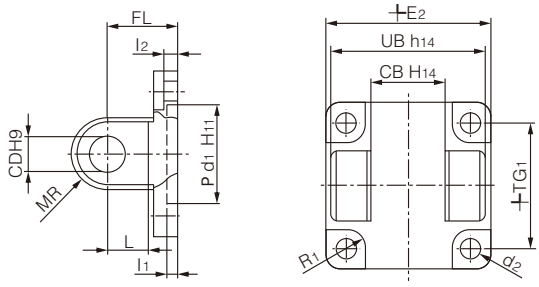

Double earring seats (E)

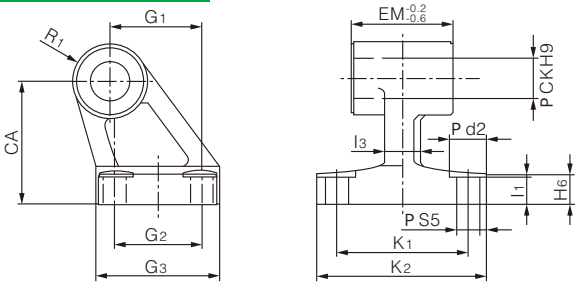

Bore size (mm)	Double earring type (D)													Double earring seats (E)													
	Part No.	TG1	FL	I1	L	I2	P CD	MR	P d2	R1	E2	UB	CB	Part No.	P d2	P CK	P S5	K1	K2 Max.	I3 Max.	G1	I1	G2	EM	G3 Max.	CA	H6	R1
32	D5032	32.5	22	5	12	5.5	10	9.5	6.6	6.5	48	45	26	E5032	11	10	6.6	38	51	10	21	7	18	26	31	32	8	10
40	D5040	38	25	5	15	5.5	12	12	6.6	6.5	56	52	28	E5040	11	12	6.6	41	54	10	24	9	22	28	35	36	10	11
50	D5050	46.5	27	5	15	6.5	12	12	9	8.5	64	60	32	E5050	15	12	9	50	65	12	33	11	30	32	45	45	12	12
63	D5063	56.5	32	5	20	6.5	16	16	9	8.5	75	70	40	E5063	15	16	9	52	67	14	37	11	35	40	50	50	12	15
80	D5080	72	36	5	20	10	16	16	11	11	95	90	50	E5080	18	16	11	66	86	18	47	12.5	40	50	60	63	14	15
100	D5100	89	41	5	25	10	20	20	11	12	115	110	60	E5100	18	20	11	76	96	20	55	13.5	50	60	70	71	15	19
125	D5125	110	50	7	30	10	25	26	13.5	10	Max. 224	130	70	E5125	20	25	14	94	124	30	70	17	60	70	90	90	20	22.5

Single earring spherical joint (CS) Black

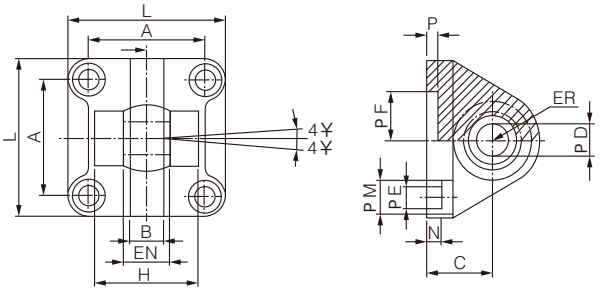

Double earring spherical joint (DS) Black

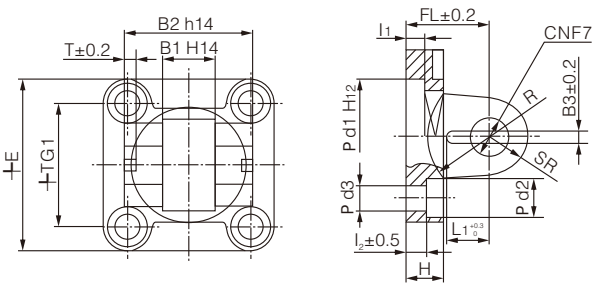

Bore size (mm)	Single earring spherical joint (CS)														Double earring spherical joint (DS)														
	Part No.	A	B Max.	C	P D H7	EN-0.1 0	ER Max.	P D H11	P E	L	P M	N	P	H ±0.5	Part No.	E	B1	B2	B3	L1	TG1	T	I1 Min.	I2	FL	H Max.	P d1	P d2	P d3	P CN	SR Max.	R
32	CS5032	32.5	10.5	22	10	14	15	30	6.6	45	10.5	5.5	5	-	Ds5032	45	14	34	3.3	11.5	32.5	3	5	5.5	22	10	30	10.5	6.6	10	11	17
40	CS5040	38	12	25	12	16	18	35	6.6	55	11	5.5	5	-	DS5040	55	16	40	4.3	12	38	4	5	5.5	25	10	35	11	6.6	12	13	20
50	CS5050	46.5	15	27	16	21	20	40	9	65	15	6.5	5	51	DS5050	65	21	45	4.3	14	46.5	4	5	6.5	27	12	40	15	9	16	18	22
63	CS5063	56.5	15	32	16	21	23	45	9	75	15	6.5	5	-	DS5063	75	21	51	4.3	14	56.5	4	5	6.5	32	12	45	15	9	16	18	25
80	CS5080	72	18	36	20	25	27	45	11	95	18	10	5	70	DS5080	95	25	65	4.3	16	72	4	5	10	36	16	45	18	11	20	22	30
100	CS5100	89	18	41	20	25	30	55	11	115	18	10	5	-	DS5100	115	25	75	6.3	16	89	4	5	10	41	16	55	18	11	20	22	32
125	CS5125	110	25	50	30	37	40	60	13.5	140	20	10	7	100	DS5125	140	37	97	6.3	24	110	6	7	10	50	20	60	20	13.5	30	30	42

Double earrings with earring holder (ES) Black

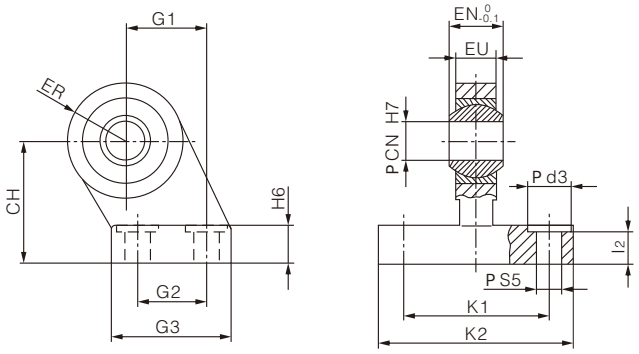

Bore size (mm)	Double earrings with earring holder (ES)														
	Part No.	P d3	P CN	P S5	K1	K2(Max.)	l2	G1	G2	G3(Max.)	EN	EU	CH	H6	ER(Max.)
32	ES5032	11	10	6.6	38	51	8.5	21	18	31	14	10.5	32	10	15
40	ES5040	11	12	6.6	41	54	8.5	24	22	35	16	12	36	10	18
50	ES5050	15	16	9	50	65	10.5	33	30	45	21	15	45	12	20
63	ES5063	15	16	9	52	67	10.5	37	35	50	21	15	50	12	23
80	ES5080	18	20	11	66	86	11.5	47	40	60	25	18	63	14	27
100	ES5100	18	20	11	76	96	12.5	55	50	70	25	18	71	15	30
125	ES5125	20	30	13.5	94	124	17	70	60	90	37	25	90	20	40

Floating joint (JA)

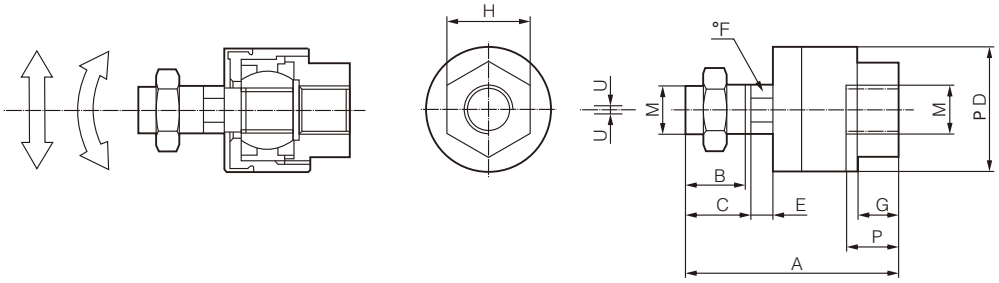

Bore size (mm)	Floating joint (JA)														
	Part No.	M	A	B	C	P D	E	F	G	H	P	U	Load(kN)	Weight(g)	Angle
32	JA30-10-125	M10×1.25	49.5	19.5	-	24	5	8	8	17	9	0.5	2.5	70	
40	JA40-12-125	M12×1.25	60	20	-	31	6	11	11	22	13	0.75	4.4	160	
50, 63	JA50-16-150	M16×1.5	71.5	22	-	41	7.5	14	13.5	27	15	1	11	300	±0.5°
80, 100	JAH50-20-150	M20×1.5	101	28	31	59.5	11.5	24	16	32	18	2	18	1080	
125	JA125-27-200	M27×2	123	34	38	66	13	27	20	41	24	2	28	1500	

Y type double toggle joint (GKM) With installation pin

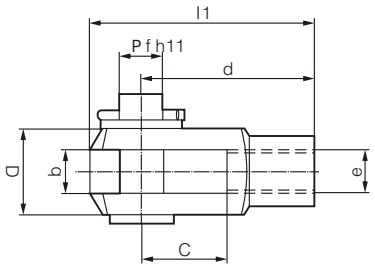

I Type single toggle joint (KJ)

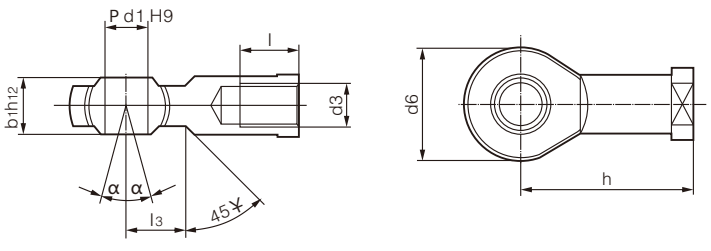

Bore size (mm)	Y type double toggle joint (GKM) (ISO 8140), With bolted and safety device									I Type single toggle joint (KJ) (ISO 8139)								
	Part No.	e	b	d	P f h11(Shaft)	P f h9(Hole)	l1	c(Min.)	a(Max.)	Part No.	d3	P d1 H9	h	d6(Max.)	b1 h12	l(Min.)	α	l3
32	GKM10-20	M10×1.25	10	40	10	10	52	20	20	KJ10D	M10×1.25	10	43	28	14	20	4°	15
40	GKM12-24	M12×1.25	12	48	12	12	62	24	24	KJ12D	M12×1.25	12	50	32	16	22	4°	17
50, 63	GKM16-32	M16×1.5	16	64	16	16	83	32	32	KJ16D	M16×1.5	16	64	42	21	28	4°	23
80, 100	GKM20-40	M20×1.5	20	80	20	20	105	40	40	KJ20D	M20×1.5	20	77	50	25	33	4°	27
125	GKM30-54	M27×2	30	110	30	30	148	54	55	KJ27D	M27×2	30	110	70	37	51	4°	36

Specifications

Bore size(mm)		12	16	20	25	32	40	50	63	80	100
Use fluid		Air									
Action mode		Double action	Single action: spring press back/spring press out								
Minimum operating pressure	Single action	0.25		0.18		0.17	0.15	0.13	-		
	Double action	0.07		0.05							
Maximum operating pressure		1.0MPa									
Ambient and fluid temperature		Without auto switch: -10 to 70℃ (No freezing) With auto switch: -10 to 60℃ (No freezing)									
Rod end thread		Internal thread (standard), external thread (optional)									
Cushion		None									
Piston speed		50~500mm/s									
Stroke length tolerance		$^{+1.0}_{0}$									
Lubrication		Not required									
Installation form		Through hole(standard), screw hole at both ends(optional)									
Pipe size		M5×0.8				1/8		1/4		3/8	

[Note] If you need oil, please use turbine No.1 oil ISOVG32.

Symbol

Double action

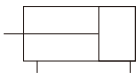

Single action

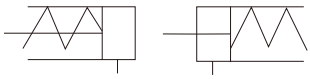

Spring pressure back　　Spring extrusion

Ordering code

N C D Q2 B □ 20 □ - 30 D □ - M9N □

Built in magnetic ring

Blank	No built-in magnetic ring
D	Built-in magnet ring

Installation form

B	Through hole (Standard)
A	Screw holes at both ends
L	Foot seat type
F	Rod side flange
G	Rodless side flange type
D	Binaural ring type

form

Blank	Compressed air type

Bore size

12	12mm
16	16mm
20	20mm
25	25mm
32	32mm
40	40mm
50	50mm
63	63mm
80	80mm
100	100mm

Tube material

Blank	Thread piping
F*	Built-in quick-change connector

* It is only used for cylinder diameter Φ32~Φ63.
There is no built-in fast replacement mode for gas-liquid combination.

Stroke

(See table below)

Action mode

D	Double action
S	Single action (spring press back)
T	Single action (spring extrusion)

* The cylinder diameter of single acting mode is only Φ12~Φ50.

Body option

Blank	Standard (Rod end internal thread)
F	Rodless sideband boss
C	Rubber cushion [Note 1]
M	Rod end male thread

* Combination of body options (“CM”, “FC”, “FM”, “FCM”) is available.
Note 1) Air-hydro type with rubber bumper is not available.

Magnetic switch type

Blank	Without magnetic switch

* Type of magnetic switch refer to itinerary/Model table of magnetic switch.
* No built-in magnetic ring.

Number of magnetic switches

Blank	2 pcs.
S	1 pc.
n	"n" pcs.

Installation parts type

Bore size (mm)	Foot seat type	Flange type	Binaural ring type
12	CQ-L012	CQ-F012	CQ-D012
16	CQ-L016	CQ-F016	CQ-D016
20	CQ-L020	CQ-F020	CQ-D020
25	CQ-L025	CQ-F025	CQ-D025
32	CQ-L032	CQ-F032	CQ-D032
40	CQ-L040	CQ-F040	CQ-D040
50	CQ-L050	CQ-F050	CQ-D050
63	CQ-L063	CQ-F063	CQ-D063
80	CQ-L080	CQ-F080	CQ-D080
100	CQ-L100	CQ-F100	CQ-D100

* One pedestal cylinder should order two pedestals.
* Installation screw for pedestal flange attachment body.
* Pin shafts for earrings, C-shaped elastic retainer rings for shafts and body mounting screw for double earrings.

Stroke/magnetic switch type table

Bore size (mm)	Standard travel (mm) Dual action	Single action	*Magnetic switch type	*Installation type	Existing Installation Model
12,16	5, 10, 15, 20, 25, 30	5, 10	M9N M9P M9B	BQ2-012	BQ-1
20,25	5, 10, 15, 20, 25, 30, 35, 40, 45, 50				
32,40	5,10,15,20,25, 30, 35, 40, 45, 50, 75, 100	10, 20			BQ-2
50	10, 15, 20, 25, 30, 35, 40, 45, 50, 75, 100				
63,80 100					

* The specifications and characteristics of magnetic switches can be referred to the magnetic open series. Behind the model of magnetic switch, the length of the attached conductor indicates the mark: unlabeled-0.5m, L-3m, Z-5m example: M9N, M9NL
** Installation model and existing installation model must be ordered and used in combination.

Permissible kinetic energy (J)

Bore size (mm)	12	16	20	25	32	40	50	63	80	100
Standard form	0.022	0.038	0.055	0.09	0.15	0.26	0.46	0.77	1.36	2.27
Cushioning pad	0.043	0.075	0.11	0.18	0.29	0.52	0.91	1.54	2.71	4.54

Allowable lateral load at rod end

Without auto switch

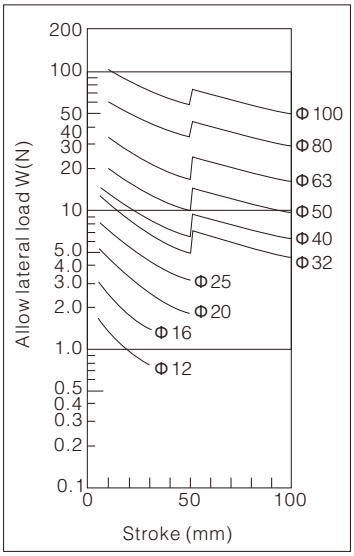

With auto switch

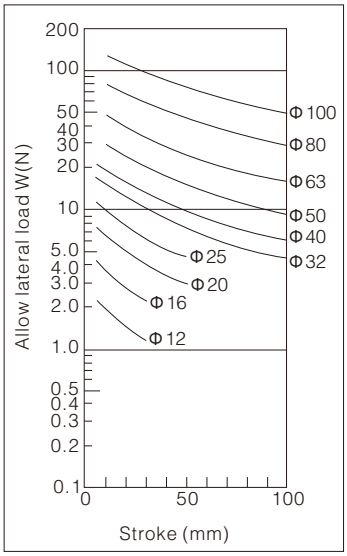

Dimensions

Through-hole Installation/CQ2B

Φ12~Φ25

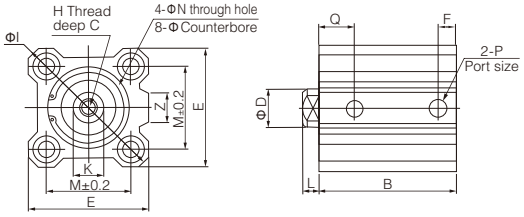

Φ32~Φ100

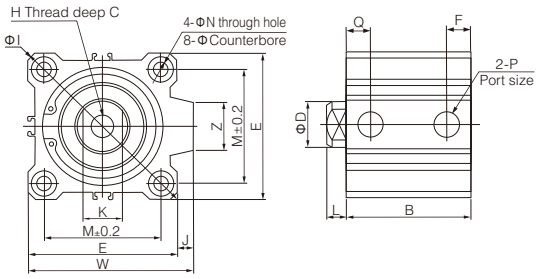

Dual-acting cylinder size table

Model	Stroke range(mm) Note 1)	B	ΦD	E	F	H	C	ΦI	J	K	L	M	ΦN	ΦO	P	Q	W	Z
NCQ2B12-□D	5~30	17	6	25	5	M3×0.5	6	32	-	5	3.5	15.5	3.5	6.5 deep 3.5	M5×0.8	7.5	-	-
NCQ2B16-□D	5~30	18.5	8	29	5.5	M4×0.7	8	38	-	6	3.5	20	3.5	6.5 deep 3.5	M5×0.8	8	-	10
NCQ2B20-□D	5~50	19.5	10	36	5.5	M3×0.5	7	47	-	8	4.5	25.5	5.5	9 deep 7	M5×0.8	9	-	10
NCQ2B25-□D	5~50	22.5	12	40	5.5	M6×1.0	12	52	-	10	5	28	5.5	9 deep 7	M5×0.8	11	-	10
NCQ2B32-□D	5	23	16	45	5.5	M8×1.25	13	60	4.5	14	7	34	5.5	9 deep 7	M5×0.8	11.5	49.5	14
	10~50				7.5										1/8	10.5		
NCQ2B40-□D	5~50	29.5	16	52	8	M8×1.25	13	69	5	14	7	40	5.5	9 deep 7	1/8	11	57	14
NCQ2B50-□D	10~50	30.5	20	64	10.5	M10×1.5	15	86	7	17	8	50	6.6	11 deep 8	1/4	10.5	71	19
NCQ2B63-□D	10~50	36	20	77	10.5	M10×1.5	15	103	7	17	8	60	9	14 deep 10.5	1/4	15	84	19
NCQ2B80-□D	10~50	43.5	25	98	12.5	M16×2.0	21	132	6	22	10	77	11	17.5 deep 13.5	3/8	16	104	26
NCQ2B100-□D	10~50	53	30	117	13	M20×2.5	27	156	6.5	27	12	94	11	17.5 deep 13.5	3/8	23	123.5	26

Note 2) Long Stroke

Model	Stroke (mm)	B	F	P	Q
32	75,100	33	7.5	1/8	10.5
40	75,100	39.5	8	1/8	11
50	75,100	40.5	10.5	1/4	10.5
63	75,100	46	10.5	1/4	15
80	75,100	53.5	12.5	3/8	16
100	75,100	63	13	3/8	23

Note 1) Standard stroke is 5 mm apart

Note 2) Intermediate stroke (55, 60, 65, 70, 80, 85, 90, 95) between 55mm and 100mm plus 5, 10, 15 or 20mm thick pads.

Note 3) Unless otherwise specified, the dimensions of through-hole cylinders are the same as those of screw-hole cylinders at both ends.

Size table of single-acting cylinder

St= stroke

Model	B			ΦD	E	F		H	C	ΦI	J	K	L	M	ΦN	ΦO	P			Q		W	Z
	5st	10st	20st			5st	10st										5st	10st	20st	5st	10st		
CQ2B12-□S	22	27	-	6	25	5	5	M3×0.5	6	32	-	5	3.5	15.5	3.5	6.5deep3.5	M5×0.8		-	7.5	7.5	-	-
CQ2B16-□S	23.5	28.5	-	8	29	5.5	5.5	M4×0.7	8	38	-	6	3.5	20	3.5	6.5deep3.5	M5×0.8		-	8	8	-	10
CQ2B20-□S	24.5	29.5	-	10	36	5.5	5.5	M5×0.8	7	47	-	8	4.5	25.5	5.5	9 deep 7	M5×0.8		-	9	9	-	10
CQ2B25-□S	27.5	32.5	-	12	40	5.5	5.5	M6×1.0	12	52	-	10	5	28	5.5	9 deep 7	M5×0.8		-	11	11	-	10
CQ2B32-□S	28	33	-	16	45	5.5	7.5	M8×1.25	13	60	4.5	14	7	34	5.5	9 deep 7	M5x0.8	1/8	-	11.5	10.5	49.5	18
CQ2B40-□S	34.5	39.5	-	16	52	8	8	M8×1.25	13	69	5	14	7	40	5.5	9 deep 7	1/8		-	11	11	57	18
CQ2B50-□S	-	40.5	50.5	20	64	10.5	10.5	M10×1.5	15	86	7	17	8	50	6.6	11 deep 8	-	1/4		10.5	10.5	71	22

Piston rod external thread

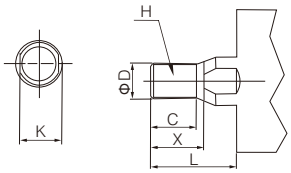

Bore size(mm)	C	X	ΦD	H	L	K
12	9	10.5	6	M5×0.8	14	5
16	10	12	8	M6×1.0	15.5	6
20	12	14	10	M8×1.25	18.5	8
25	15	17.5	12	M10×1.25	22.5	10
32	20.5	23.5	16	M14×1.5	28.5	14
40	20.5	23.5	16	M14×1.5	28.5	14
50	26	28.5	20	M18×1.5	33.5	17
63	26	28.5	20	M18×1.5	33.5	17
80	32.5	35.5	25	M22×1.5	43.5	22
100	32.5	35.5	30	M26×1.5	43.5	27

Two end screw hole installation type/CQ2A

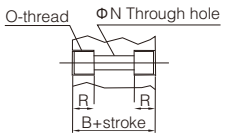

Bore size(mm)	O	R
12	M4×0.7	7
16	M4×0.7	7
20	M6×1.0	10
25	M6×1.0	10
32	M6×1.0	10
40	M6×1.0	10
50	M8×1.25	14
63	M10×1.5	18
80	M12×1.75	22
100	M12×1.15	22

Single action/Spring extrusion

Φ12~Φ50

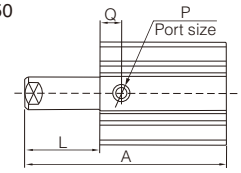

Bore size (mm)	A			L		
	5st	10st	20st	5st	10st	20st
12	30.5	40.5	-	8.5	13.5	-
16	32	42	-	8.5	13.5	-
20	34	44	-	9.5	14.5	-
25	37.5	47.5	-	10	15	-
32	40	50	-	12	17	-
40	46.5	56.5	-	12	17	-
50	-	58.5	78.5	-	18	28

* Unless otherwise specified, the size of through-hole cylinders is the same as that of screw-hole cylinders at both ends.

Dimensions

CDQ2B

Φ12~Φ25

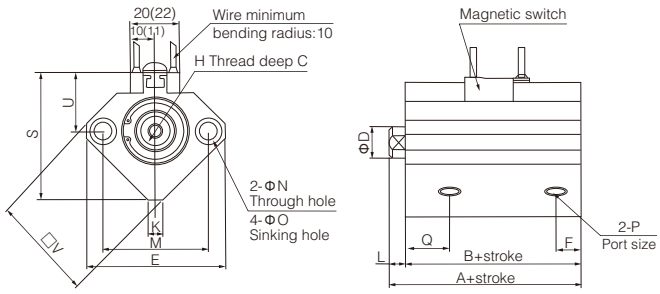

Φ32~Φ100

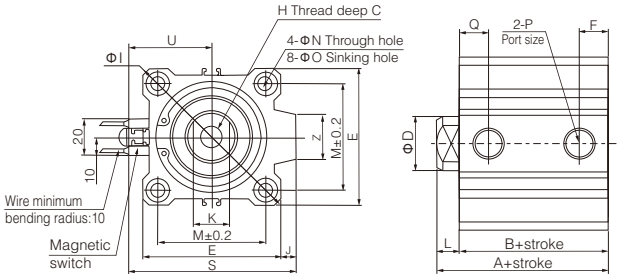

Model	Stroke Note 1) range(mm)	A	B	ΦD	E	F	H	C	ΦI	J	K	L	M	ΦN	ΦO	P	Q	S	U	V	Z
NCDQ2B12	5~30	31.5	28	6	32	6.5	M3×0.5	6	-	-	5	3.5	22	3.5	6.5 deep 3.5	M5×0.8	11	35.5	19.5	25	-
NCDQ2B16	5~30	34	30.5	8	38	5.5	M4×0.7	8	-	-	6	3.5	28	3.5	6.5 deep 3.5	M5×0.8	10	41.5	22.5	29	-
NCDQ2B20	5~50	36	31.5	10	46.8	5.5	M5×0.8	7	-	-	8	4.5	36	5.5	9 deep 7	M5×0.8	10.5	48	24.5	36	-
NCDQ2B25	5~50	37.5	32.5	12	52	5.5	M6×1.0	12	-	-	10	5	40	5.5	9 deep 7	M5×0.8	11	53.5	27.5	40	-
NCDQ2B32	5~50	40	33	16	45	7.5	M8×1.25	13	60	4.5	14	7	34	5.5	9 deep 7	1/8	10.5	58.5	31.5	-	18
NCDQ2B40	5~50	46.5	39.5	16	52	8	M8×1.25	13	69	5	14	7	40	5.5	9 deep 7	1/8	11	66	35	-	18
NCDQ2B50	10~50	48.5	40.5	20	64	10.5	M10×1.5	15	86	7	17	8	50	6.6	11 deep 8	1/4	10.5	80	41	-	22
NCDQ2B63	10~50	54	46	20	77	10.5	M10×1.5	15	103	7	17	8	60	9	14 deep 10.5	1/4	15	93	47.5	-	22
NCDQ2B80	10~50	63.5	53.5	25	98	12.5	M16×2.0	21	132	6	22	10	77	11	17.5 deep 13.5	3/8	16	112.5	57.5	-	26
NCDQ2B100	10~50	75	63	30	117	13	M20×2.5	27	156	6.5	27	12	94	11	17.5 deep 13.5	3/8	23	132.5	67.5	-	26

Note 2) Long stroke

Model	stroke(mm)	A	B	F	P	Q
32	75,100	40	33	7.5	1/8	10.5
40	75,100	46.5	39.5	8	1/8	11
50	75,100	48.5	40.5	10.5	1/4	10.5
63	75,100	54	46	10.5	1/4	15
80	75,100	63.5	53.5	12.5	3/8	16
100	75,100	75	63	13	3/8	23

Note 1) Standard stroke is 5 mm apart.
Note 2) Intermediate stroke (55, 60, 65, 70, 80, 85, 90, 95) between 55mm and 100mm plus 5, 10, 15 or 20mm thick pads.
Note 3) Unless otherwise specified, the dimensions of through-hole cylinders are the same as those of screw-hole cylinders at both ends.
Note 4) Only one magnetic switch can be installed in a 5 mm stroke cylinder.

Note 3) Screw holes at both ends: CDQ2A

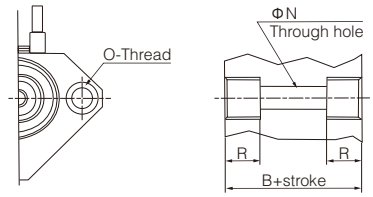

Bore size(mm)	O	R
12	M4×0.7	7
16	M4×0.7	7
20	M6×1.0	10
25	M6×1.0	10
32	M6×1.0	10
40	M6×1.0	10
50	M8×1.25	14
63	M10×1.5	18
80	M12×1.75	22
100	M12×1.75	22

External threads at rod end

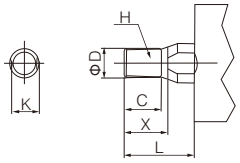

Bore size(mm)	C	X	ΦD	H	L	K
12	9	10.5	6	M5×0.8	14	5
16	10	12	6	M6×1.0	15.5	6
20	12	14	10	M8×1.25	18.5	8
25	15	17.5	12	M10×1.25	22.5	10
32	20.5	23.5	16	M14×1.5	28.5	14
40	20.5	23.5	16	M14×1.5	28.5	14
50	26	28.5	20	M18×1.5	33.5	17
63	26	28.5	20	M18×1.5	33.5	17
80	32.5	35.5	25	M22×1.5	43.5	22
100	32.5	35.5	30	M26×1.5	43.5	27

I Type single toggle joint

I-G012, I-Z015A
I-G012, I-G03A

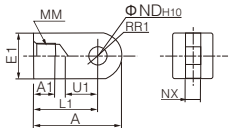

I-G04, I-G05
I-G08, I-G10

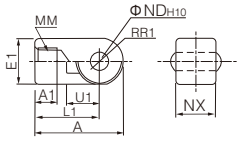

Y Type double toggle joint

Y-G012, Y-Z015A
AY-G02, Y-G03

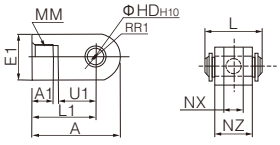

Y-G04, Y-G05
Y-G08, Y-G10

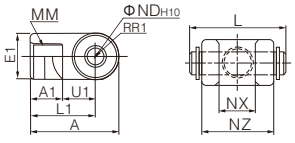

Applicable bore size (mm)	I Type single toggle joint										Y Type double toggle joint											
	Part No.	A	A1	E1	L1	MM	RR1	U1	ND_{H10}	NX	Part No.	A	A1	E1	L1	MM	RR1	U1	ΦND_{H10}	NX	NZ	L
12	I-G012	21.5	6	□10	16	M5×0.8	6.3	7	$5^{+0.048}_{0}$	$5^{-0.2}_{-0.4}$	Y-G012	21.5	6	□10	16	M5×0.8	6.3	7	$5^{+0.048}_{0}$	$5^{+0.4}_{+0.2}$	10	14.6
16	I-Z015A	32	8	□12	25	M6×1	8.1	14	$5^{+0.048}_{0}$	$6.4^{-0.1}_{-0.3}$	Y-Z015A	28	11	□12	21	M6×1	8.1	10	$5^{+0.048}_{0}$	$6.5^{+0.4}_{+0.2}$	12	16.6
20	I-G02	34	8.5	□16	25	M8×1.25	10.3	11.5	$8^{+0.058}_{0}$	$8^{-0.2}_{-0.4}$	Y-G02	34	8.5	□16	25	M8×1.25	10.3	11.5	$8^{+0.058}_{0}$	$8^{+0.4}_{+0.2}$	16	21
25	I-G03	41	10.5	□20	30	M10×1.25	12.8	14	$10^{+0.058}_{0}$	$10^{-0.2}_{-0.4}$	Y-G03	41	10.5	□20	30	M10×1.25	12.8	14	$10^{+0.058}_{0}$	$10^{+0.4}_{+0.2}$	20	25.6
32,40	I-G04	42	14	Φ22	30	M14×1.5	12	14	$10^{+0.058}_{0}$	$18^{-0.3}_{-0.5}$	Y-G04	42	16	Φ22	30	M14×1.5	12	14	$10^{+0.058}_{0}$	$18^{+0.5}_{+0.3}$	36	41.6
50,63	I-G05	56	18	Φ28	40	M18×1.5	16	20	$14^{+0.070}_{0}$	$22^{-0.3}_{-0.5}$	Y-G05	56	20	Φ28	40	M18×1.5	16	20	$14^{+0.070}_{0}$	$22^{+0.5}_{+0.3}$	44	50.6
80	I-G08	71	21	Φ38	50	M22×1.5	21	27	$18^{+0.070}_{0}$	$28^{-0.3}_{-0.5}$	Y-G08	71	23	Φ38	50	M22×1.5	21	27	$18^{+0.070}_{0}$	$28^{+0.5}_{+0.3}$	56	64
100	I-G10	79	21	Φ44	55	M26×1.5	24	31	$22^{+0.084}_{0}$	$32^{-0.3}_{-0.5}$	Y-G10	79	24	Φ44	55	M26×1.5	24	31	$22^{+0.084}_{0}$	$32^{+0.5}_{+0.3}$	64	72

Toggle joint pins

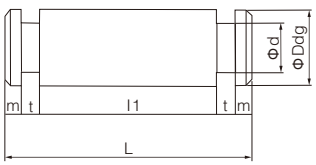

Applicable bore size (mm)	Toggle joint pins						
	Part No.	ΦDdg	L	Φd	l	m	t
12	IY-G012	$5^{-0.030}_{-0.060}$	14.6	4.8	10.2	1.5	0.7
16	IY-J015	$5^{-0.030}_{-0.060}$	16.6	4.8	12.2	1.5	0.7
20	IY-G02	$8^{-0.040}_{-0.076}$	21	7.6	16.2	1.5	0.9
25	IY-G03	$10^{-0.040}_{-0.076}$	25.6	9.6	20.2	1.55	1.15
30, 40	IY-G04	$10^{-0.040}_{-0.076}$	41.6	9.6	36.3	1.55	1.15
50, 63	IY-G05	$14^{-0.050}_{-0.093}$	50.6	13.4	44.2	2.05	1.15
80	IY-G08	$18^{-0.050}_{-0.093}$	64	17	56.2	2.55	1.35
100	IY-G10	$22^{-0.065}_{-0.117}$	72	21	64.2	2.55	1.35

Specifications

Bore size(mm)	125	140	160	180	200
Use fluid	Air				
Action mode	Double action				
Maximum operating pressure	1.0MPa		0.7MPa		
Minimum operating pressure	0.05MPa				
Ambient and fluid temperature	Without auto switch: -10 to 70℃ (No freezing) With auto switch: -10 to 60℃ (No freezing)				
Rod end thread	Internal thread (standard), external thread (optional)				
Use piston speed	Standard rubber buffer				
Cushion	50~500mm/s		20~400mm/s		
Stroke tolerance (mm)	$^{+1.4}_{0}$				
Lubrication	Don't need				
Installation form	Through hole and screw hole at both ends (common)				
Pipe size	Rc3/8		Rc1/2		

[Note] If oil is supplied, please use turbine No.1 oil ISOVG32.

Symbol

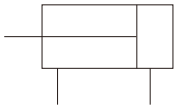

Ordering code

N C D Q2 □ B 125 - 30 D C □ - A73 □

Built in magnetic ring

Blank	No built-in magnetic ring
D	Built-in magnet ring

Piston rod form

Blank	Single rod
W	Double rod

Installation form

Through holes and screw holes at both ends can be used.

Bore size

125	125mm
140	140mm
160	160mm
180	180mm
200	200mm

Stroke

See the right table

Double action

Rubber cushion

Options

Blank	Standard (rod end internal thread)
M	Rod end male thread

Magnetic switch type

Blank	Without magnetic switch

* Refer to tour/magnetic switch model list for magnetic switch model
* No built-in magnetic ring cylinder no such item

Number of magnetic switches

Blank	2 pcs.
S	1 pc.
n	"n" pcs.

Stroke/magnetic switch type table

Bore size (mm)	Standard stroke (mm)	*Magnetic switch type	
		Track installation (Φ125-Φ160)	Direct installation
125	10, 20, 30, 40, 50, 75, 100, 125, 150, 175, 200, 250, 300	A73 Installation type: BQ-2	Z73
140			
160			
180			
200			

* The specifications and characteristics of magnetic switches can be referred to the series of magnetic switches.
* Wire Length Representation Mark: Unmarked-0.5m, L-3m, Z-5m
  Example: A73, A73L.

Dimensions

CQ2B/CDQ2B

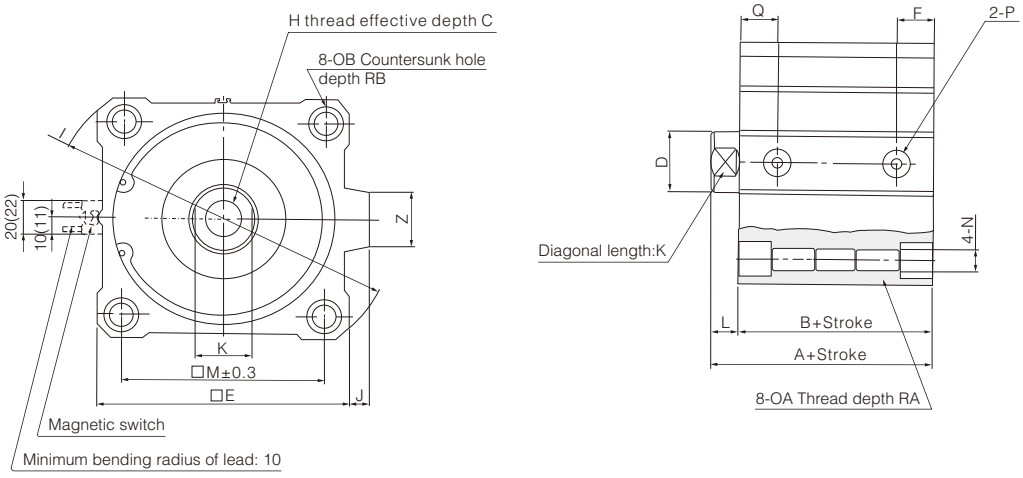

Bore size(mm)	Standard stroke	A	B	C	D	E	F	H	I	J	K	L	M	N	OA	OB	P	Q	RA	RB	Z
125	10,20,30,40,50, 75,100,125,150, 175,200,250,300	99	83	30	36	142	24.5	M22×2.5	190	11	32	16	114	12.5	M14×2	21.2	Rc3/8	24.5	25	18.4	32
140		99	83	30	36	158	24.5	M22×2.5	210	10	32	16	128	12.5	M14×2	21.2	Rc3/8	24.5	25	18.4	32
160		108	91	33	40	178	27.5	M24×3	238	10	36	17	144	14.5	M16×2	24.2	Rc3/8	27.5	28	21.2	32

Note 1) Non-standard stroke is to install the gasket in the standard stroke cylinder.
Note 2) If through hole is used for installation, the attached washer must be used.

CQ2B/CDQ2B

External threads at rod end

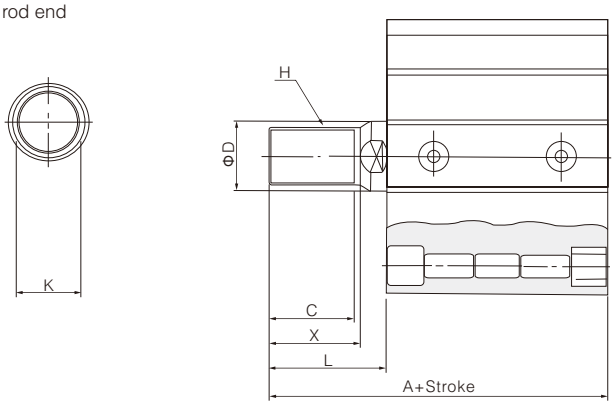

External threads at rod end

Bore size(mm)	A	C	ΦD	H	K	L	X
125	141	42	36	M30×1.5	32	58	45
140	141	42	36	M30×1.5	32	58	45
160	155	47	40	M36×1.5	36	64	50

Φ180

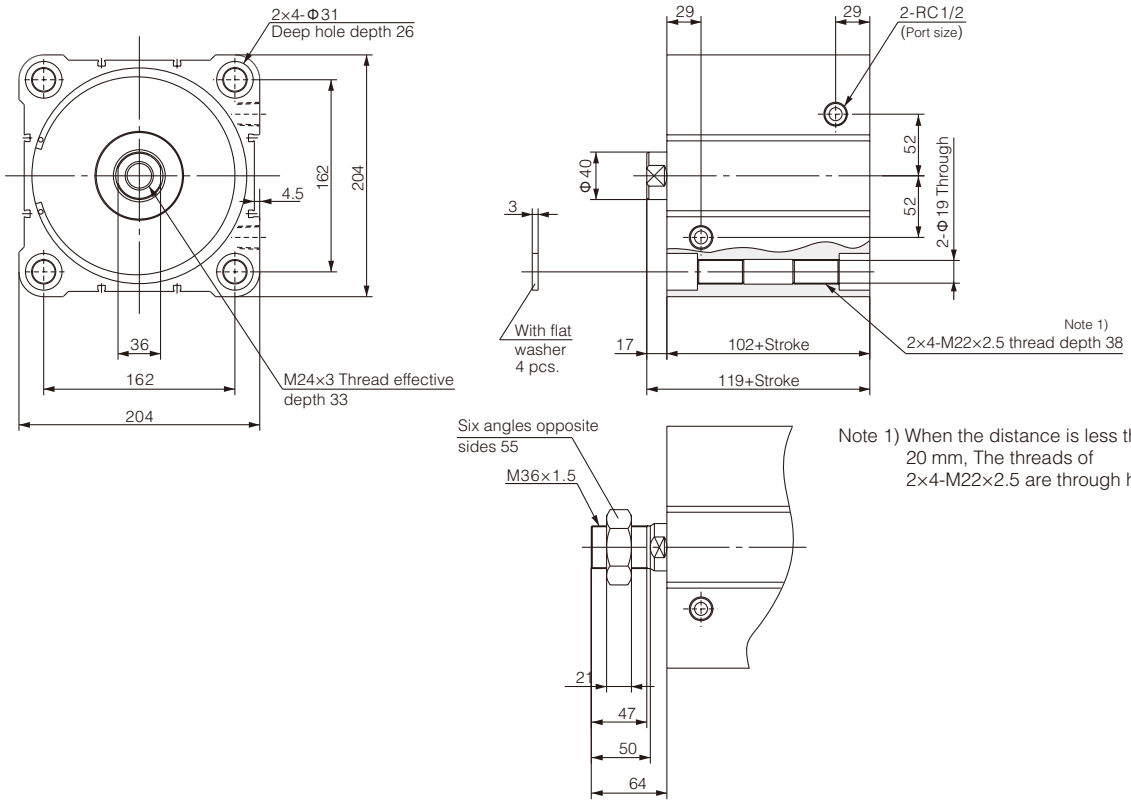

Note 1) When the distance is less than 20 mm, The threads of 2×4-M22×2.5 are through holes.

Φ200

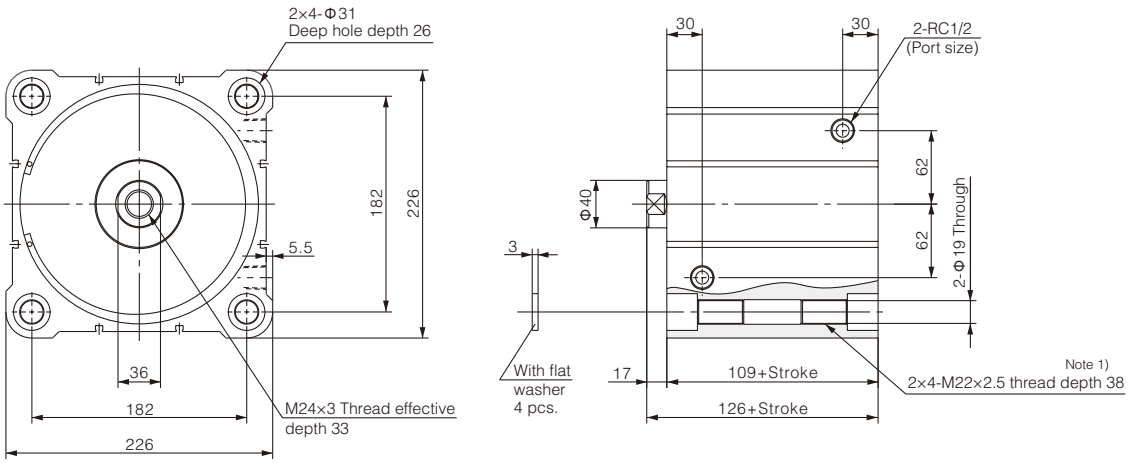

Specifications

Bore size(mm)	32	40	50	63	80	100
Use fluid	Air					
Action mode	Double acting					
Proof pressure	1.5MPa					
Maximum operating pressure	1.0MPa					
Minimum operating pressure	0.05MPa					
Ambient and fluid temperature	Without auto switch: -10 to 70℃ (No freezing) With auto switch: -10 to 60℃ (No freezing)					
Rod end thread	Internal thread (standard), external thread (optional)					
Use piston speed	50~500mm/s					
Cushion	Standard rubber buffer					
Stroke tolerance (mm)	$^{+1.4}_{0}$					
Lubrication	Don't need					
Installation form	Screw holes at both ends (standard)					
Pipe size	1/8		1/4		3/8	

[Note] If oil is supplied, please use turbine No.1 oil ISOVG32.

Symbol

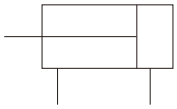

Ordering code

N C D Q2 A 32 □ - 200 D C □ - A73 □

Built in magnetic ring

Blank	No built-in magnetic ring
D	Built-in magnet ring

Installation form

A	Both ends tapped
F	Rod flange
G	Head flange
L	Foot type
D	Double clevis

Piping mode

Blank	Thread piping
F*	Built-in quick joint

* Only phi Φ32~Φ63

Bore size

32	32mm
40	40mm
50	50mm
63	63mm
80	80mm
100	100mm

Stroke

See the right table

Rubber cushion

Double action

Options

Blank	Standard (rod end internal thread)
M	Rod end male thread

Magnetic switch type

Blank	Without magnetic switch

* Refer to tour/magnetic switch model list for magnetic switch model
* No built-in magnetic ring cylinder no such item

Number of magnetic switches

Blank	2 pcs.
S	1 pc.
n	"n" pcs.

Stroke/magnetic switch type table

Bore size (mm)	Standard stroke (mm)	*Magnetic switch type	
		Track installation (Φ125-Φ160)	Direct installation
32	125, 150 175, 200 250, 300	A73	Z73
40			
50			
63			
80			
100			

* The specifications and characteristics of magnetic switches can be referred to the series of magnetic switches. The type of installation is BQ-2.
* The length of conductor is denoted as mark: no mark - 0.5m, L - 3m. Example: A73, A73L.

Dimensions

Rod end female thread CQ2A/CDQ2A

Rod end male thread

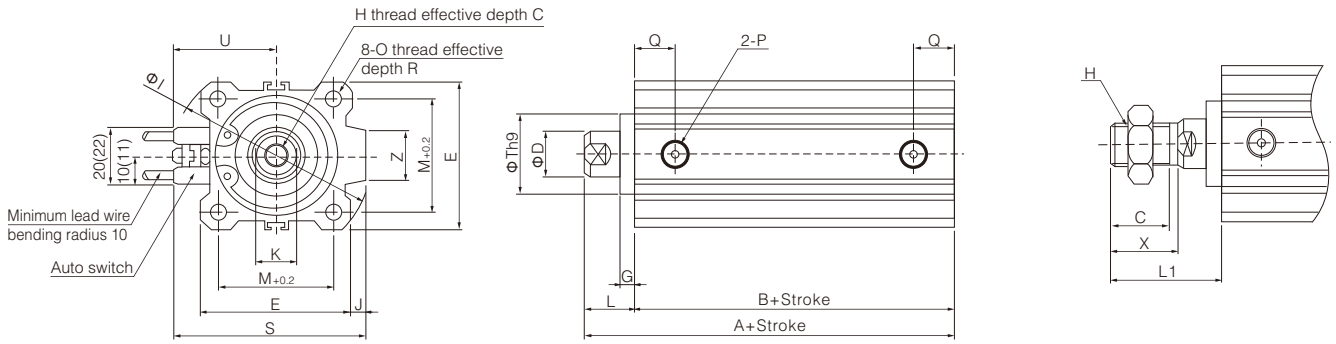

( ) The dimensions of magnetic switches other than D-A7 are in parentheses.

Bore size (mm)	Stroke (mm)	Rod end female thread																				Rod end male thread			
		A	B	C	D	E	G	H	I	J	K	L	M	O	P	Q	R	S	Th9	U	Z	C	H	L1	X
32	125, 150 175, 200 250, 300	62.5	45.5	13	16	45	5	M8×1.25	60	4.5	14	17	34	M6×1.0	RC1/8	12.5	10	58.5	$22^{0}_{-0.052}$	31.5	14	20.5	M14×1.5	38.5	23.5
40		72	55	13	16	52	5	M8×1.25	69	5	14	17	40	M6×1.0	RC1/8	14	10	66	$28^{0}_{-0.052}$	35	14	20.5	M14×1.5	38.5	23.5
50		73.5	55.5	15	20	64	5	M10×1.5	86	7	17	18	50	M8×1.25	RC1/4	14	14	80	$35^{0}_{-0.062}$	41	19	26	M18×1.5	43.5	28.5
53		75	57	15	20	77	5	M10×1.5	103	7	17	18	60	M10×1.5	RC1/4	16.5	18	93	$35^{0}_{-0.062}$	47.5	19	26	M18×1.5	43.5	28.5
80		86	66	21	25	98	5	M16×2.0	132	6	22	20	77	M12×1.75	RC3/8	19	22	112.5	$43^{0}_{-0.062}$	57.5	26	32.5	M22×1.5	53.5	35.5
100		97.5	75.5	27	30	117	5	M20×2.5	156	6.5	27	22	94	M12×1.75	RC3/8	23	22	132.5	$59^{0}_{-0.074}$	67.5	26	32.5	M26×1.5	53.5	35.5

Specifications

Bore size(mm)	12	16	20	25
Use fluid	Air			
Action mode	Double acting, Single action: spring press back/spring press out			
Maximum operating pressure	1.0MPa			
Minimum operating pressure	0.07MPa		0.05MPa	
Ambient and fluid temperature	Without auto switch: -10 to 70℃ (No freezing) With auto switch: -10 to 60℃ (No freezing)			
Rod end thread	Internal thread (standard), external thread (optional)			
Buffer	Without			
Stroke tolerance (mm)	$^{+1.0}_{0}$			
Cushion	Don't need			
Use piston speed	50~500mm/s			
Pipe size	M5×0.8			

[Note] If oil is supplied, please use turbine No.1 oil ISOVG32.

Symbol

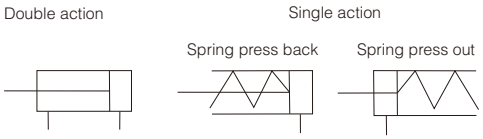

Ordering code

N C D QS B 20 - 30 D □ - M9N □

Built in magnetic ring

Blank	No built-in magnetic ring
D	Built-in magnet ring

Installation form

B	Through-hole Both ends tapped common (Standard)
L	Foot type
F	Rod side flange type
G	Head side flange type
D	Double clevis type

Bore size

32	32mm
40	40mm
50	50mm
63	63mm
80	80mm
100	100mm

Stroke

See the right table

Action

D	Double action
S	Single action(Spring press out)
T	Single action(Spring press back)

Options

Blank	Standard (rod end internal thread)
C	With rubber bumper
M	Rod end male thread

Magnetic switch type

Blank	Without magnetic switch

* Refer to tour/magnetic switch model list for magnetic switch model
* No built-in magnetic ring cylinder no such item

Number of magnetic switches

Blank	2 pcs.
S	1 pc.
n	"n" pcs.

Stroke/magnetic switch type table

Bore size (mm)	Standard stroke (mm)		*Magnetic switch type (Track installation)
	Double action Note)	Single action	
12, 16	5, 10, 15, 20, 25, 30	5, 10	M9N M9B M9P
20, 25	5, 10, 15, 20, 25, 30, 35, 40, 45, 50		

* The specifications and characteristics of magnetic switches can be referred to the series of magnetic switches. Note) With long stroke
* Wire length representation mark: Unmarked -0.5m, L-3m, Z-5m
  Example: M9N, M9NL.

Characteristic

Easy installation

Sharing of through holes and screw holes at both ends

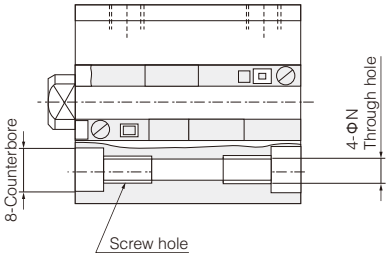

Save space

The miniature magnetic switch is installed in the cylinder groove and will not expose the outside of the cylinder block.

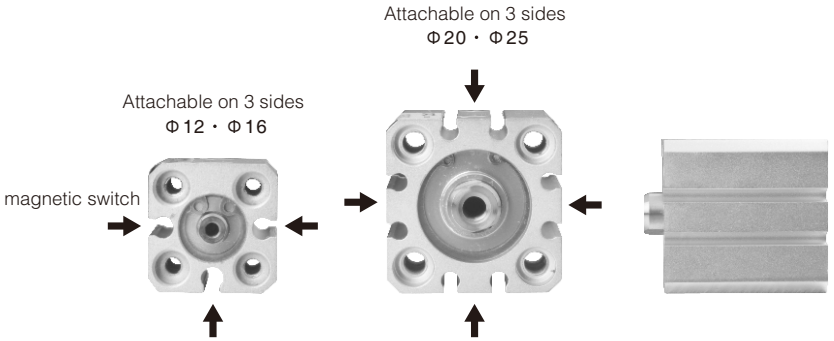

Position installation of magnetic switch can be selected from many sides
(Φ12・Φ16: 3 sides, Φ20・Φ25: 4 sides)

Dimensions

Through hole and screw hole sharing at both ends (Double action / Single action: Spring press back/Spring press out)
CQSB/CDQSB

Φ12

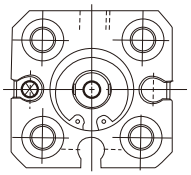

Φ20 · Φ25

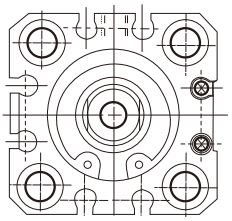

Φ16 Double action/Single action: Spring pressure back

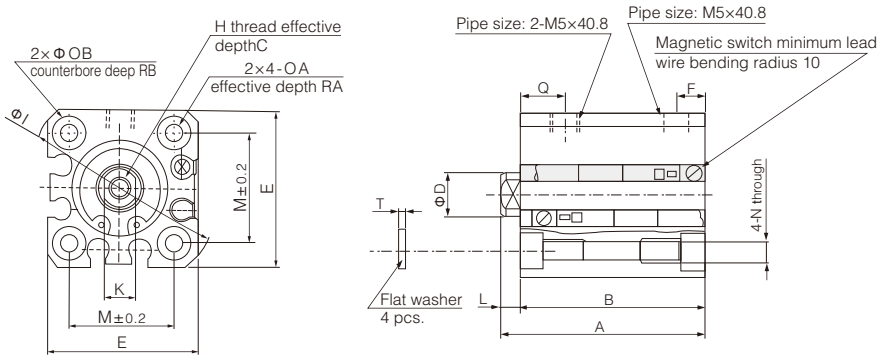

Φ16 Single action(Spring press out)

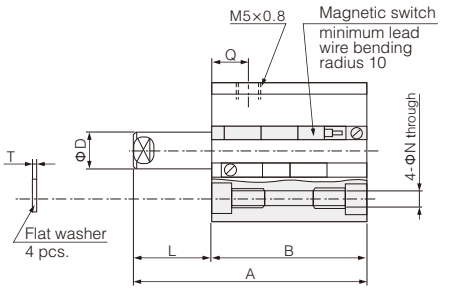

External threads at rod end (double action/single action: spring back)

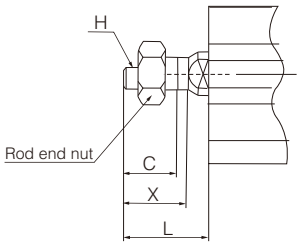

Bore size (mm)	C	H	L	X
12	9	M5×0.8	14	10.5
16	10	M6×1.0	15.5	12
20	12	M8×1.25	18.5	14
25	15	M10×1.25	22.5	17.5

External threads at rod end (single action: spring extrusion)

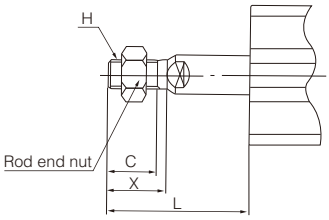

Bore size (mm)	C	H	L		X
			5ST	10ST	
12	9	M5×0.8	19	24	10.5
16	10	M6×1.0	20.5	25.5	12
20	12	M8×1.25	23.5	28.5	14
25	15	M10×1.25	27.5	32.5	17.5

Dual-acting and single-acting shared size table

Bore size (mm)	Basic type													
	C	D	E	H	I	K	M	N	OA	OB	RA	RB	T	Q
12	6	6	25	M3×0.5	32	5	15.5	3.5	M4×0.7	6.5	7	4	0.5	7.5
16	8	8	29	M4×0.7	38	6	20	3.5	M4×0.7	6.5	7	4	0.5	7.5
20	7	10	36	M5×0.8	47	8	25.5	5.4	M6×1.0	9	10	7	1	9
25	12	12	40	M6×1.0	52	10	28	5.4	M6×1.0	9	10	7	1	11

Double action

ST=Stroke

Bore size (mm)	Stroke range (mm)	Basic type					Built-in magnetic ring	
		A	B	F	L	Q	A	B
12	5~30	20.5+st	17+st	5	3.5	7.5	25.5+st	22+st
16	5~30	20.5+st	17+st	5	3.5	7.5	25.5+st	22+st
20	5~50	24+st	19.5+st	5.5	4.5	9	34+st	29.5+st
25	5~50	27.5+st	22.5+st	5.5	5	11	37.5+st	32.5+st

Single action: spring press back

ST=Stroke

Bore size (mm)	Stroke range (mm)	Basic type						Built-in magnetic ring			
		A		B		F	L	A		B	
		5ST	10ST	5ST	10ST			5ST	10ST	5ST	10ST
12	5, 10	25.5	30.5	22	27	5	3.5	30.5	35.5	27	32
16		25.5	30.5	22	27	5	3.5	30.5	35.5	27	32
20		29	34	24.5	29.5	5.5	4.5	39	44	34.5	39.5
25		32.5	37.5	27.5	32.5	5.5	5	42.5	47.5	37.5	42.5

Single action: spring extrusion

ST=Stroke

Bore size (mm)	Stroke range (mm)	Basic type							Built-in magnetic ring			
		A		B		L		Q	A		B	
		5ST	10ST	5ST	10ST	5ST	10ST		5ST	10ST	5ST	10ST
12	5, 10	30.5	40.5	22	27	8.5	13.5	7.5	35.5	45.5	27	32
16		30.5	40.5	22	27	8.5	13.5	7.5	35.5	45.5	27	32
20		34	39	24.5	29.5	9.5	14.5	9	44	49	34.5	39.5
25		37.5	42.5	27.5	32.5	10	15	11	47.5	52.5	37.5	42.5

Specifications

Action mode		Double acting, Single rod
Maximum operating pressure		1.0 MPa
Minimum operating pressure	Φ12~Φ16	0.12 MPa
	Φ20~Φ100	0.1 MPa
Ambient and fluid temperature		Without auto switch: -10 to 70℃ (No freezing) With auto switch: -10 to 60℃ (No freezing)
Buffer		Rubber bumper on both ends
Stroke tolerance (mm)		$^{+1.0}_{0}$
Use piston speed	Φ12~Φ40	50~500mm/s
	Φ50~Φ100	50~300mm/s

* Installation dimensions are interchangeable with NCQS and NCQ2 series.
* The accuracy of non-rotation is less than 0.2 degrees.
* Do not use as a stop.

Symbol

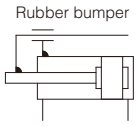

Ordering code

N C D QM B — 20 - □ — 10 - M9B S

Built in magnetic ring

Blank	No built-in magnetic ring
D	Built-in magnet ring

Installation form

B	Through-hole (Standard)
A	Both ends tapped (Φ32 to Φ100)

* The "A" of Φ12~Φ25 is also expressed as "B".

Bore size

12	12mm	40	40mm
16	16mm	50	50mm
20	20mm	63	63mm
25	25mm	80	80mm
32	32mm	100	100mm

Thread type

Blank	M thread	Φ12~Φ25
	Rc	
TN	NPT	Φ32~Φ100
TF	G	

Note) Φ32 without magnetic switch, when the stroke is 5 mm, is M thread.

Stroke

See the right table

Magnetic switch type

Blank	Without magnetic switch

* Refer to the right table for the type of magnetic switch.
* No built-in magnetic ring cylinder no such item

Number of magnetic switches

Blank	2 pcs.
S	1 pc.
n	"n" pcs.

Stroke/magnetic switch type table

Bore size (mm)	Standard stroke (mm)	*Magnetic switch type	
		Track installation	Direct installation
12, 16	5, 10, 15, 20, 25, 30	M9N M9B M9P	
20, 25	5, 10, 15, 20, 25, 30, 35, 40, 45, 50		
32, 40	5, 10, 15, 20, 25, 30, 35, 40, 45, 50, 75, 100		
50, 63 80, 100	10, 15, 20, 25, 30, 35, 40, 45, 50, 75, 100		

* Installation model: BQ-2 (but P5DW is BQP1-050).

Dimensions

Φ12

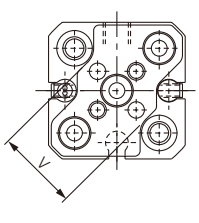

Φ16

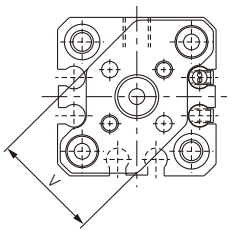

Φ20, Φ25

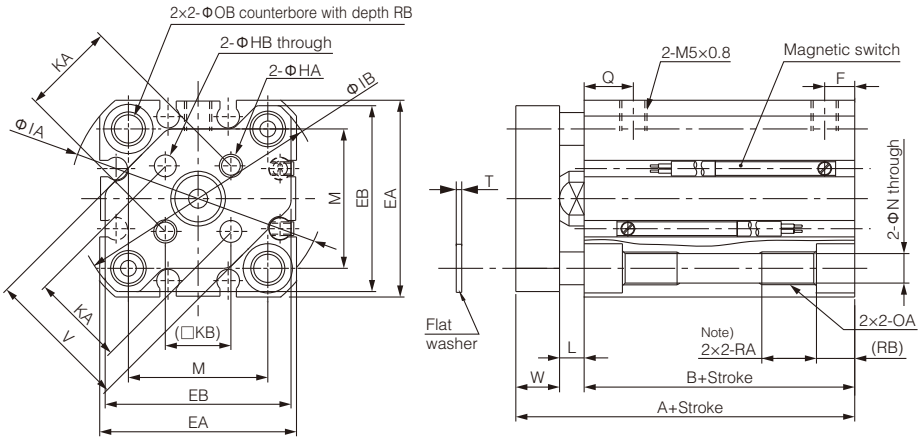

Bore size (mm)	Stroke range (mm)	Without auto switch		With auto switch		EA	EB	F	HA	OA	HB	IA	IB	KA	KB	L	M	N	OB	Q	RA	RB	T	V	W
		A	B	A	B																				
12	5~30	26.5	17	31.5	22	25	24	5	M3×0.5	M4×0.7	3	32	31.5	10	7.1	3.5	15.5	3.5	6.5	7.5	7	4	0.5	14.9	6
16	5~30	26.5	17	31.5	22	29	28	5	M3×0.5	M4×0.7	3	38	37	14	9.9	3.5	20	3.5	6.5	7.5	7	4	0.5	20	6
20	5~50	32	19.5	42	29.5	36	34	5.5	M4×0.7	M6×1.0	4	47	45.5	17	12	4.5	25.5	5.4	9	9	10	7	1	26	8
25	5~50	35.5	22.5	45.5	32.5	40	38	5.5	M5×0.8	M6×1.0	5	52	50.5	22	15.6	5	28	5.4	9	11	10	7	1	30	8

Note) Standard type without magnetic switch/Φ12, Φ16: 5mm, Φ20: 5-15mm, Φ25: 5-10mm and magnetic switch ring built-in/Φ20: 5mm stroke are all through-hole threads.

Φ32~Φ50

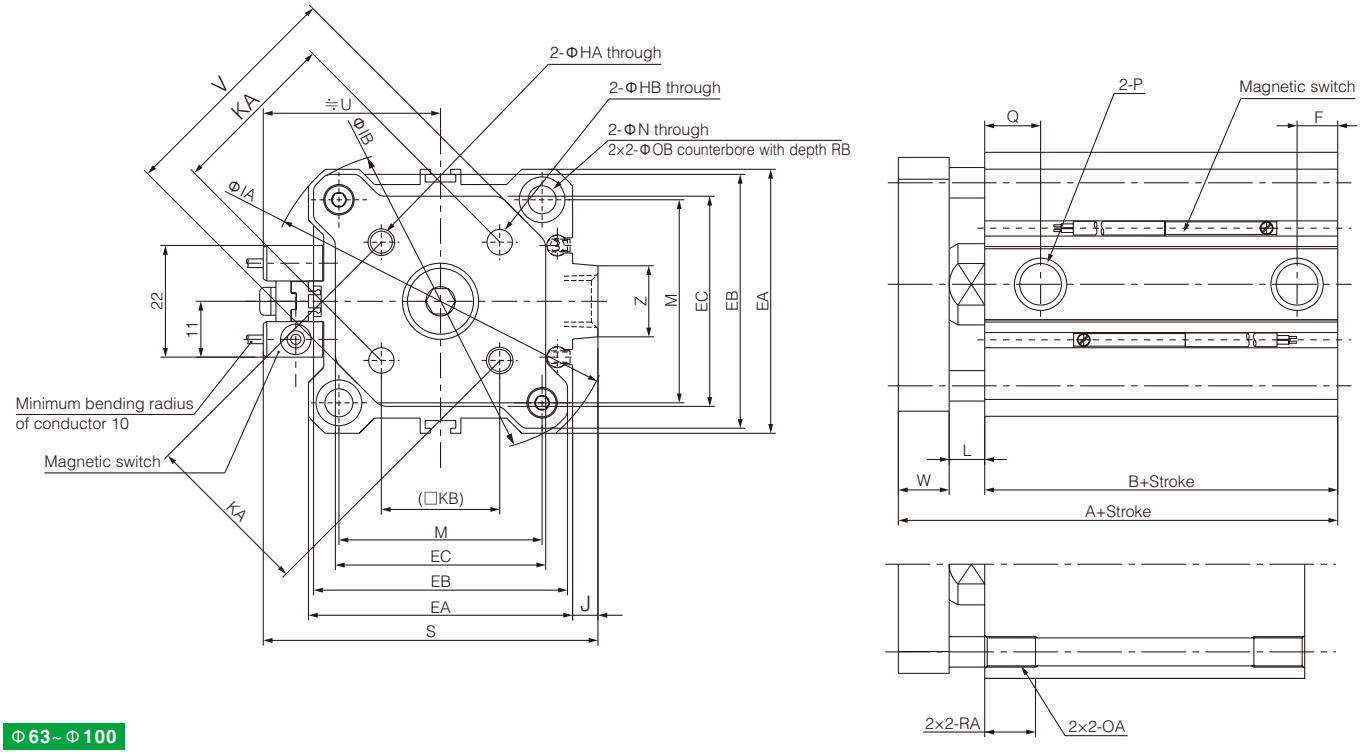

Φ63~Φ100

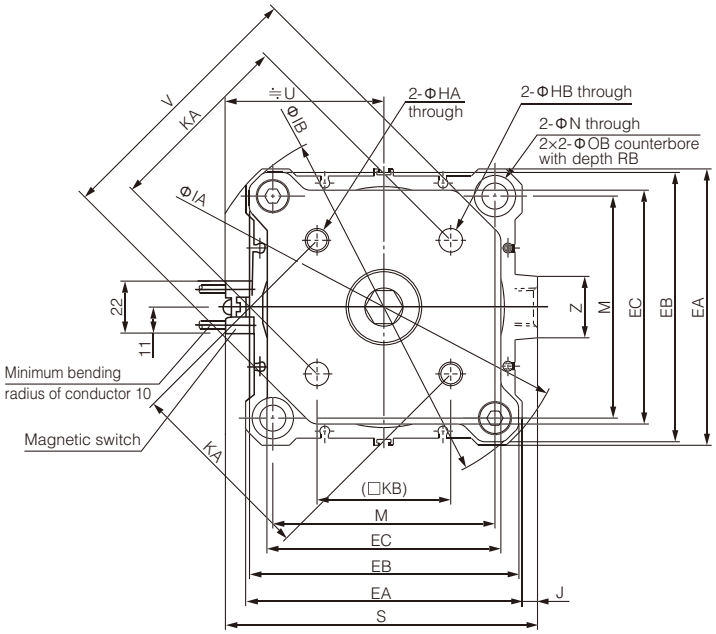

Two end screw hole (CQMA)

Bore size (mm)	HA	OA	HB	IA	IB	J	KA
32	M5×0.8	M6×1.0	5	60	58.5	4.5	28
40	M5×0.8	M6×1.0	5	69	67.5	5	33
50	M6×1.0	M8×1.25	6	86	84.5	7	42
63	M6×1.0	M10×1.5	$6^{+0.2}_{0}$	103	100	7	$50^{+0.2}_{0}$
80	M8×1.25	M12×1.75	$8^{+0.2}_{0}$	132	129	6	$65^{+0.2}_{0}$
100	M10×1.5	M12×1.75	$10^{+0.2}_{0}$	156	153	6.5	$80^{+0.2}_{0}$

Bore size (mm)	KB	L	M	N	OB	RA	RB	S	U	V	W	Z
32	19.8	7	34	5.5	9	10	7	58.5	31.5	38	10	14
40	23.3	7	40	5.5	9	10	7	66	35	46	10	14
50	29.7	8	50	6.6	11	14	8	80	41	58	12	19
63	35.4	8	60	9	14	18	10.5	93	47.5	69	12	19
80	46	10	77	11	17.5	22	13.5	112.5	57.5	89	14	26
100	56.6	10	94	11	17.5	22	13.5	132.5	67.5	113	16	26

Bore size (mm)	Stroke range (mm)	Without auto switch							With auto switch							EA	EB	EC
		A	B	F	Q	P			A	B	F	Q	P					
						–	TN	TF					–	TN	TF			
32	5	40	23	5.5	11.5	M5×0.8	–	–	50	33	7.5	10.5	Rc1/8	NPT1/8	G1/8	45	43	34.4
	10~50			7.5	10.5	Rc1/8	NPT1/8	G1/8										
	75・100	50	33															
40	5~50	46.5	29.5	8	11	Rc1/8	NPT1/8	G1/8	56.5	39.5	8	11	Rc1/8	NPT1/8	G1/8	52	50	41.4
	75・100	56.5	39.5															
50	10~50	50.5	30.5	10.5	10.5	Rc1/4	NPT1/4	G1/4	60.5	40.5	10.5	10.5	Rc1/4	NPT1/4	G1/4	64	62	53.4
	75・100	60.5	40.5															
63	10~50	56	36	10.5	15	Rc1/4	NPT1/4	G1/4	66	46	10.5	15	Rc1/4	NPT1/4	G1/4	77	74	59.6
	75・100	66	46															
80	10~50	67.5	43.5	12.5	16	Rc3/8	NPT3/8	G3/8	77.5	53.5	12.5	16	Rc3/8	NPT3/8	G3/8	98	95	79.5
	75・100	77.5	53.5															
100	10~50	79	53	13	23	Rc3/8	NPT3/8	G3/8	89	63	13	23	Rc3/8	NPT3/8	G3/8	117	114	99
	75・100	89	63															

Specifications

Bore size(mm)	20	25	32, 40	50, 63	80, 100
Use fluid	Air				
Action mode	Single rod double action				
Use pressure range	0.05~1.0MPa				
Ambient and fluid temperature	Without auto switch: -10 to 70℃ (No freezing) With auto switch: -10 to 60℃ (No freezing)				
Rod end thread	Internal thread				
Stroke length tolerance	$^{+1.0}_{0}$				
Use piston speed	50~500mm/s				
Installation form	Through hole, screw hole at both ends, pedestal type, flange type, double earring type				
Pipe size	M5×0.8		1/8	1/4	3/8

A new type of air cushion mechanism without cushion sleeve is designed. Compared with NCQ2 and NCQS, the total cylinder length increases by only a few millimeters, but the cushioning capacity increases by two times, and the repetition accuracy increases.

Symbol

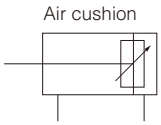

Ordering code

N R D Q B — 32 □ — 50 — □ — M9BV □

Built in magnetic ring

Blank	No built-in magnetic ring
D	Built-in magnet ring

Installation form

B	Through-hole (standard)
A	Both ends tapped type
L	Foot type
F	Rod side flange type
G	Head side flange type
D	Double clevis type

* Φ20, Φ25 through holes are common to both ends of the screw holes, expressed only by "A"

Bore size

20	20mm
25	25mm
32	32mm
40	40mm
50	50mm
63	63mm
80	80mm
100	100mm

Thread type

Blank	Rc, M5×0.8*
TN	NPT
TF	G

* Suitable for cylinder diameter Φ20, Φ25

Stroke

15, 20, 25
30, 40, 50
20, 25, 30, 40
50, 75, 100
30, 40, 50, 75, 100
40, 50, 75, 100

Rod end thread

Blank	Rod end female thread (Standard)
M	Rod end male thread

Magnetic switch type

Blank	Without magnetic switch

* No built-in magnetic ring cylinder no such item

Number of magnetic switches

Blank	2 pcs.
S	1 pc.
n	"n" pcs.

Some magnetic switch models are recommended

Track installation	A72(H), A73(H), A76H, A79W, A73C, F79, J79, F7NV, F7BV
Direct installation	A93, A93V, A96, A96V, M9N, M9P, M9B, F9NW, F9BA, M9NV, M9PV, M9BV

* Installation type: BQ-2
** At the end of the model, the length of the attached conductor indicates that the mark is 0.5m, L is 3m, Z is 5m, for example: A93, A93L.

Dimensions

Φ20, Φ25 Installation form: through hole, screw hole at both ends

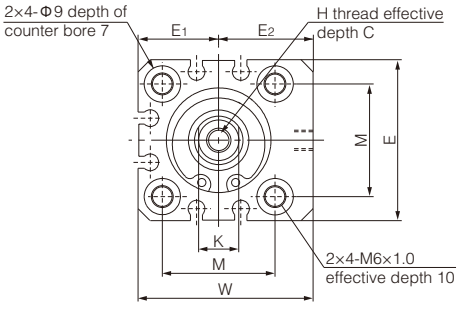

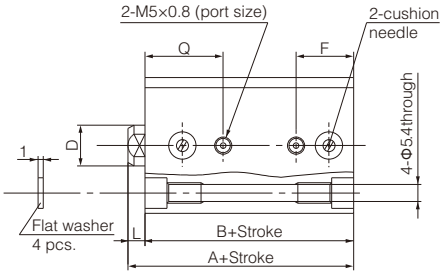

Rod end male thread

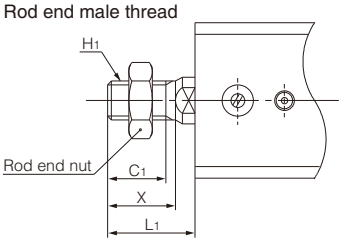

Rod end male thread

Bore size(mm)	C1	X	H1	L1
20	12	14	M8×1.25	18.5
25	15	17.5	M10×1.25	22.5

Standard type

Bore size(mm)	Stroke range(mm)	A	B	C	D	E	E1	E2	F	H	K	L	M	Q	W
20	15~50	36.5	32	7	10	36	18	21	15.5	M5×0.8	8	4.5	25.5	21	39
25	15~50	41.5	36.5	12	12	40	20	23.5	17	M6×1.0	10	5	28	23	43.5

Foot type: NRQL/NRDQL

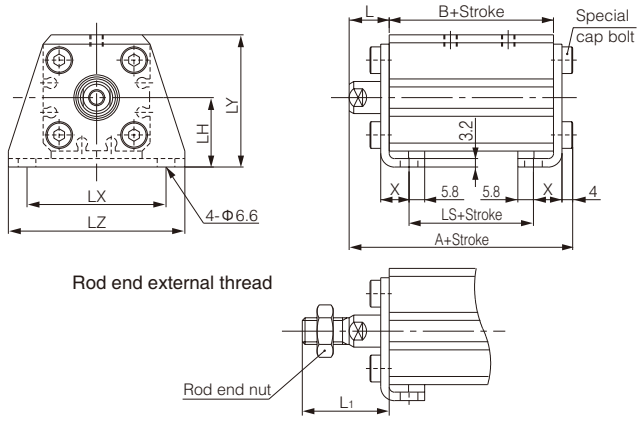

Foot type

Bore size (mm)	Installation type	Stroke range (mm)	A	LS	L	L1
20	NCQS-L020	15~50	53.7	20	14.5	28.5
25	NCQS-L025	15~50	58.7	21.5	15	32.5

Bore size(mm)	B	LH	LX	LY	LZ	X
20	32	24	48	45	62	9.2
25	36.5	26	52	49.5	66	10.7

(Dimensions A, LS, L, L1 are different, other sizes are the same.)

Rod side flange type: NRQLC/NRDQLC

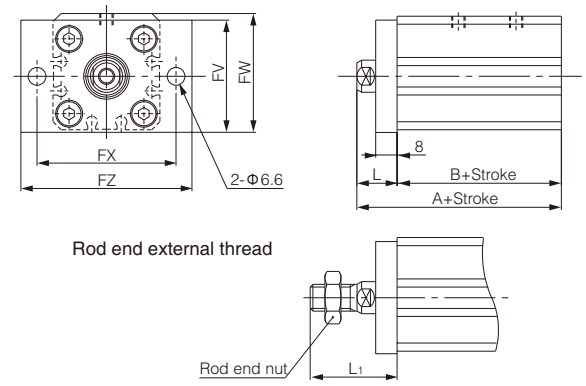

Rod side flange type

Bore size (mm)	Installation type	Stroke range (mm)	A	L	L1
20	NCQS-F020	15~50	46.5	14.5	28.5
25	NCQS-F025	15~50	51.5	15	32.5

Bore size(mm)	B	FV	FW	FX	FZ
20	32	39	40.5	48	60
25	36.5	42	44.5	52	64

(Dimensions A, L, L1 are different, other sizes are the same.)

Rodless side flange type: NRQG/NRDQG

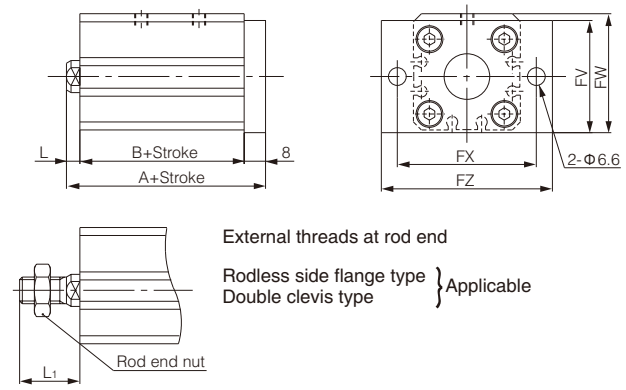

Rodless side flange type

Bore size(mm)	Installation type	Stroke range(mm)	A
20	NCQS-F020	15~50	44.5
25	NCQS-F025	15~50	49.5

Bore size(mm)	B	L	FV	FW	FX	FZ
20	32	4.5	39	40.5	48	60
25	36.5	5	42	44.5	52	64

(Dimension A is different, other sizes are the same.)

Double clevis type: NRQD/NRDQD

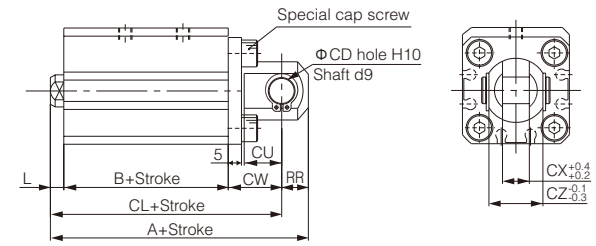

Double clevis type

Bore size(mm)	Installation type	Stroke range(mm)	A	CL
20	NCQS-D020	15~50	63.5	54.5
25	NCQS-D025	15~50	71.5	61.5

Bore size(mm)	B	L	L1	CD	CU	CW	CX	CZ	RR
20	32	4.5	18.5	8	12	18	8	16	9
25	36.5	5	22.5	10	14	20	10	20	10

(Dimensions A and CL are different, other sizes are the same.)

Φ32, Φ40, Φ50, Φ63, Φ80, Φ100

Standard type (through hole): NRQB/NRDQB

The occasion of screw holes at both ends

Bore size(mm)	OA	RA
32	M6×1.0	10
40	M6×1.0	10
50	M8×1.25	14
63	M10×1.5	18
80	M12×1.75	22
100	M12×1.75	22

Two End Screw Holes: NRQA/NRDQA

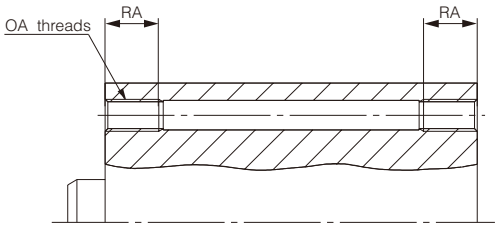

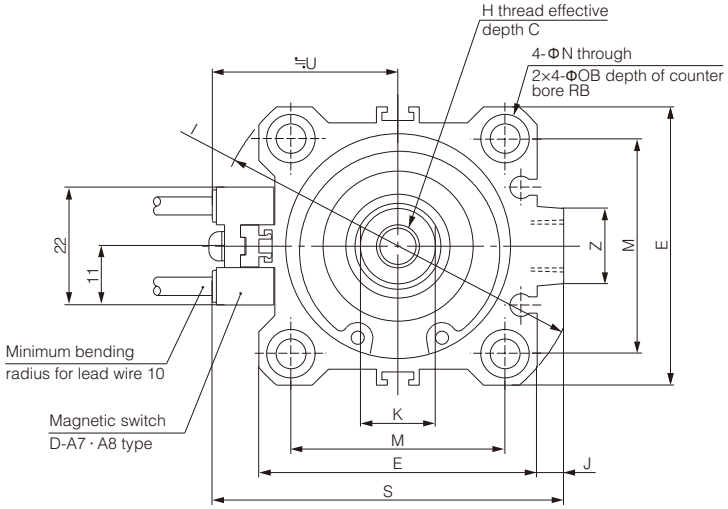

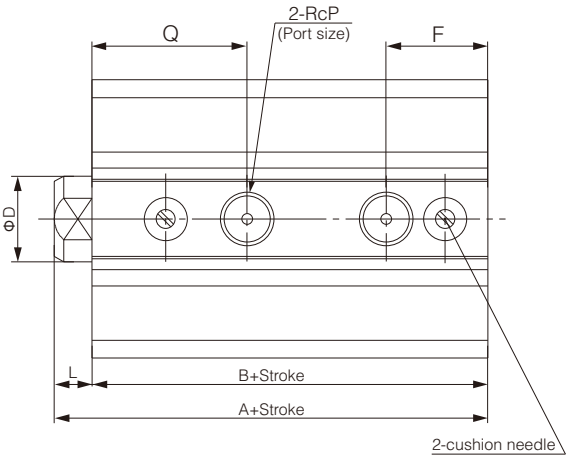

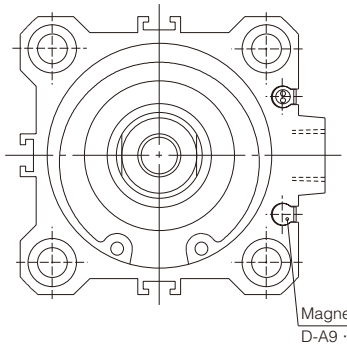

External threads at rod end

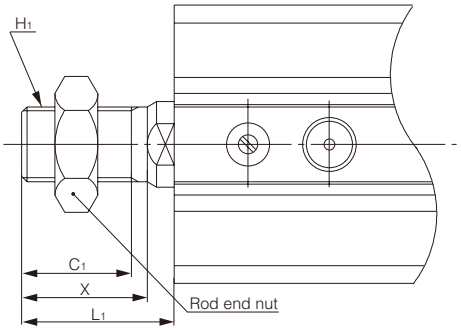

The occasion of rod end external thread

Bore size(mm)	C_1	X	H_1	L_1
32	20.5	23.5	M14×1.5	28.5
40	20.5	23.5	M14×1.5	28.5
50	26	28.5	M18×1.5	33.5
63	26	28.5	M18×1.5	33.5
80	32.5	35.5	M22×1.5	43.5
100	32.5	35.5	M26×2.5	43.5

Standard type

Bore size(mm)	Stroke range(mm)	A	B	C	D	E	F	H	I	J	K	L	M	N	OB	P	Q	RB	S	U	Z
32	20~100	44	37	13	16	45	18.5	M8×1.25	60	4.5	14	7	34	5.5	9	1/8	23	7	58.5	31.5	14
40	20~100	51	44	13	16	52	20	M8×1.25	69	5	14	7	40	5.5	9	1/8	28	7	66	35	14
50	30~100	57.5	49.5	15	20	64	28.5	M10×1.5	86	7	17	8	50	6.6	11	1/4	31.5	8	80	41	19
63	30~100	63	55	15	20	77	31	M10×1.5	103	7	17	8	60	9	14	1/4	34	10.5	93	47.5	19
80	40~100	73.5	63.5	21	25	98	35.5	M16×2	132	6	22	10	77	11	17.5	3/8	39	13.5	112.5	57.5	26
100	40~100	88	76	27	30	117	40	M20×2.5	156	6.5	27	12	94	11	17.5	3/8	43	13.5	132.5	67.5	26

Foot type: NRQL/NRDQL

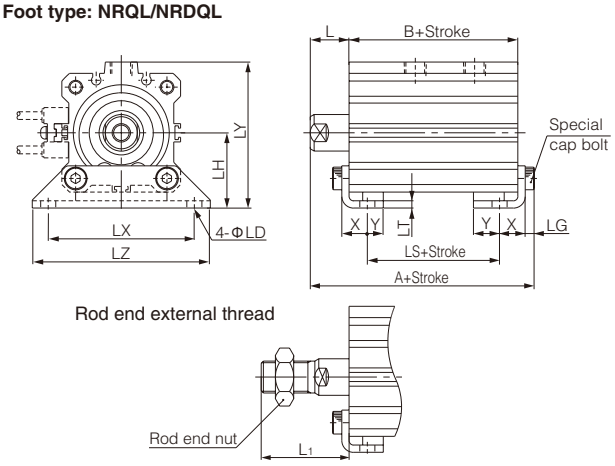

Foot type

Bore size (mm)	Installation type	Stroke range (mm)	A	B	LS	L	L1	LD
32	CQ-L032	20~100	61.2	37	21	17	38.5	6.6
40	CQ-L040	20~100	68.2	44	28	17	38.5	6.6
50	CQ-L050	30~100	75.7	49.5	26.5	18	43.5	9
63	CQ-L063	30~100	81.2	55	29	18	43.5	11
80	CQ-L080	40~100	95	63.5	33.5	20	53.5	13
100	CQ-L100	40~100	111	76	42	22	53.5	13

Bore size(mm)	LG	LH	LX	LY	LZ	X	Y	LT
32	4	30	57	57	71	11.2	5.8	3.2
40	4	33	64	64	78	11.2	7	3.2
50	5	39	79	78	95	14.7	8	3.2
63	5	46	95	91.5	113	16.2	9	3.2
80	7	59	118	114	140	19.5	11	4.5
100	7	71	137	136	162	23	12.5	6

Rod side flange type: NRQF/NRDQF

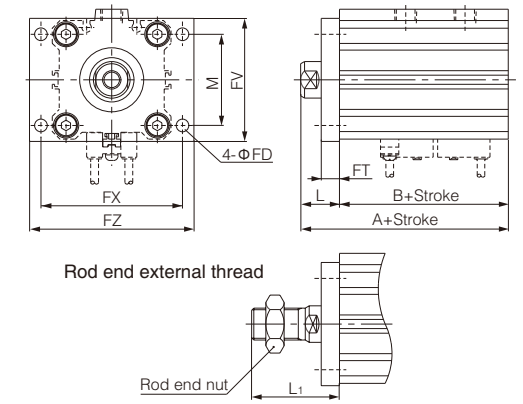

Rod side flange type

Bore size (mm)	Installation type	Stroke range (mm)	A	B	FD	FT	FV
32	CQ-F032	20~100	54	37	5.5	8	48
40	CQ-F040	20~100	61	44	5.5	8	54
50	CQ-F050	30~100	67.5	49.5	6.6	9	67
63	CQ-F063	30~100	73	55	9	9	80
80	CQ-F080	40~100	83.5	63.5	11	11	99
100	CQ-F100	40~100	98	76	11	11	117

Bore size(mm)	FX	FZ	L	L1	M
32	56	65	17	38.5	34
40	62	72	17	38.5	40
50	76	89	18	43.5	50
63	92	108	18	43.5	60
80	116	134	20	53.5	77
100	136	154	22	53.5	94

Rodless side flange type: NRQG/NRDQG

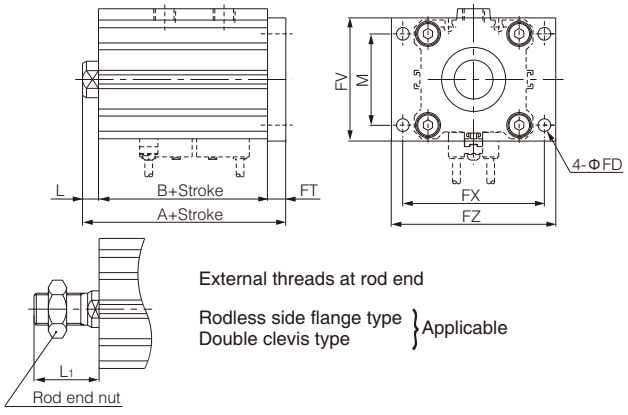

Rodless side flange type

Bore size (mm)	Installation type	Stroke range (mm)	A	L	L1
32	CQ-F032	20~100	52	7	28.5
40	CQ-F040	20~100	59	7	28.5
50	CQ-F050	30~100	66.5	8	33.5
63	CQ-F063	30~100	72	8	33.5
80	CQ-F080	40~100	84.5	10	43.5
100	CQ-F100	40~100	99	12	43.5

* All dimensions but A, L and L1 are identical to those of the rod side flange type.

Double clevis type: NRQD/NRDQD

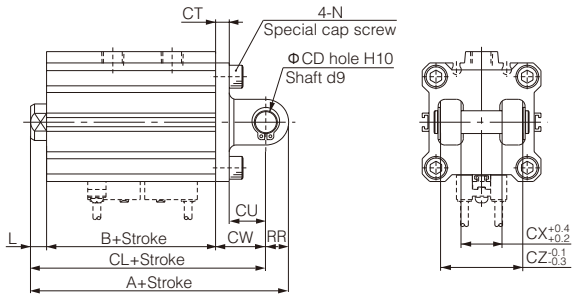

Double clevis type

Bore size (mm)	Installation type	Stroke range (mm)	A	B	CL	CD	CT	CU
32	CQ-D032	20~100	74	37	64	10	5	14
40	CQ-D040	20~100	83	44	73	10	6	14
50	CQ-D050	30~100	99.5	49.5	85.5	14	7	20
63	CQ-D063	30~100	107	55	93	14	8	20
80	CQ-D080	40~100	129.5	63.5	111.5	18	10	27
100	CQ-D100	40~100	155	76	133	22	13	31

Bore size(mm)	CW	CX	CZ	L	L1	N	RR
32	20	18	36	7	28.5	M6×1.0	10
40	22	18	36	7	28.5	M6×1.0	10
50	28	22	44	8	33.5	M8×1.25	147
63	30	22	44	8	33.5	M10×1.5	14
80	38	28	56	10	43.5	M12×1.75	18
100	45	32	64	12	43.5	M12×1.75	22



Symbol

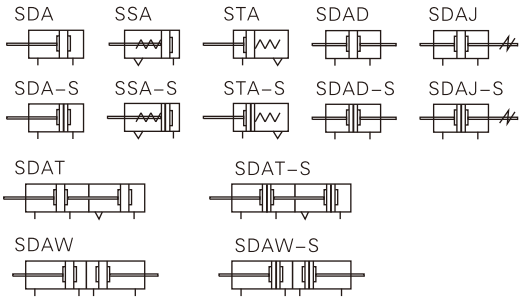

Product feature

1. Manufactured by our enterprise.
2. Riveted structure is adopted to connect the cylinder body and back cover, and piston and piston rod to make it compact and reliable;
3. The inner diameter of the body is treated with rolling followed by the treatment of hard anodizing, forming an excellent abrasion resistance and durability.
4. The seal of piston adopts heterogeneous two-way seal structure. It has compact dimension and the function of grease reservation.
5. Compact structure can effectively save installation space.
6. There are magnetic switch slots around the cylinder body, which is convenient to install sensor switch.
7. Mounting accessories with various specifications are optional.

Specifications

Bore size(mm)		12	16	20	25	32	40	50	63	80	100
Acting type		Double acting									
		Single acting_ Push type, Single acting_ Pull type								-	
Fluid		Air(to be filtered by 40μm filter element)									
Operating pressure	Double acting	0.15~1.0MPa(22~145psi)(1.5~10.0bar)									
	Single acting	0.2~1.0MPa(28~145psi)(2.0~10.0bar)									
Proof pressure		1.5MPa(215psi)(15bar)									
Temperature ℃		-20~70									
Speed range mm/s		Double acting: 30~500, Single acting: 50~500									
Stroke tolerance		Stroke≤100 $^{+1.0}_{0}$ Stroke>100 $^{+1.5}_{0}$									
Cushion type		Bumper									
Port size [Note]		M5×0.8				1/8"		1/4"		3/8"	

[Note] PT thread, G thread thread and NPT thread are available.

Stroke

Bore size(mm)			Standard stroke (mm)	Max.std stroke	Max. stroke
12 16	Double acting	With magnet	5 10 15 20 25 30 35 40 45 50	50	70
		Without magnet	5 10 15 20 25 30 35 40 45 50 55 60	60	80
	Single acting		5 10 15 20 25 30	30	-
20	Double acting	With magnet	5 10 15 20 25 30 35 40 45 50 55 60 65 70 75 80 85 90	90	130
		Without magnet	5 10 15 20 25 30 35 40 45 50 55 60 65 70 75 80 85 90 100	100	140
	Single acting		5 10 15 20 25 30	30	-
25 32 40 50 63	Double acting	With magnet	5 10 15 20 25 30 35 40 45 50 55 60 65 70 75 80 85 90 100 110 120	120	150
		Without magnet	5 10 15 20 25 30 35 40 45 50 55 60 65 70 75 80 85 90 100 110 120 130	130	160
	Single acting		5 10 15 20 25 30	23	-
80 100	Double acting	With magnet	5 10 15 20 25 30 35 40 45 50 55 60 65 70 75 80 85 90 100 110 120	120	150
		Without magnet	5 10 15 20 25 30 35 40 45 50 55 60 65 70 75 80 85 90 100 110 120 130	130	160

Note) 1. Please contact the company for other special strokes.
2. The dimensions of non-std stroke cylinder has the same dimensions as the next longer stroke std. stroke cylinder. e.g. 23mm stroke cylinder has the same dimensions of 25 std. stroke cylinder.

Ordering code

SDA / SDAD / SDAJ **20** × **30** – **30** **S** **B** □

Model

SDA	Compact cylinder(Double acting)
SSA	Compact cylinder(Single acting-push)
STA	Compact cylinder(Signele acting-pull)
SDAD	Compact cylinder(Double rod)
SDAJ	SDAJ: Compact cylinder(Adjustable stroke)

Bore size

SSA, STA	12 16 20 25 32 40 50 63
SDA, SDAD, SDAJ	12 16 20 25 32 40 50 63 80 100

Stroke

Refer to stroke table for details

Adjustable Stroke

SDAJ	10: 10mm
	20: 20mm
	30: 30mm
	40: 40mm
	50: 50mm
	75: 75mm
	100: 100mm
Others	No this code

Magnet code

Blank	Without magnet
S	With magnet

Rod type

Blank	Female thread
B	Male thread

Thread type [Note1]

Blank	PT
G	G
T	NPT

SDAT **20** × **30** × **10** **S** **B** □

Model

SDAT	Compact cylinder(Duplex type)
SDAW	Compact cylinder(Duplex-end type)

Bore size

12 16 20 25 32 40 50 63 80 100

Stroke 1

Refer to stroke table for details

Stroke 2

Refer to stroke table for details

Magnet code

Blank	Without magnet
S	With magnet

Rod type

Blank	Female thread
B	Male thread

Thread type [Note1]

Blank	PT
G	G
T	NPT

[Note1] Standard thread is blank here.

Inner structure and material of major parts

SDA

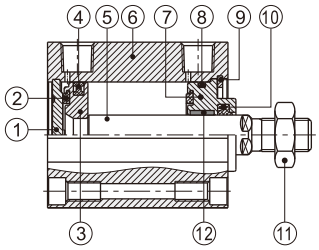

NO.	Item	Material
1	Back cover	No(Φ12, 16)/Aluminum alloy (Others)
2	Bumper	NBR
3	Piston	Brass(Φ12, 16)/Aluminum alloy (Others)
4	Piston seal	NBR
5	Piston rod	Carbon steel with 20μm chrome plated
6	Body	Aluminum alloy
7	Front cover	Aluminum alloy
8	O-ring	NBR
9	C clip	Spring steel
10	Front cover packing	NBR
11	Piston nut	Carbon steel
12	Bushing	No(Φ12~32)/Wear resistant material (Others)

Dimensions

SDA Φ12\Φ16

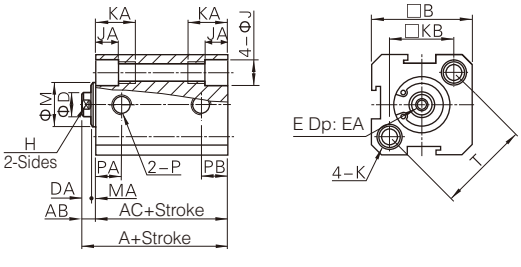

Φ20~Φ100

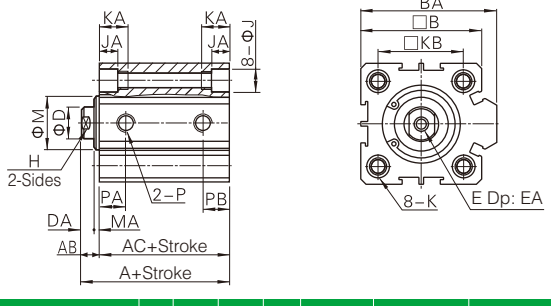

Item / Bore size	A (Without magnet)	AC (Without magnet)	A (With magnet)	AC (With magnet)	AB	B	BA	D	DA	E	EA	H	J	JA	K	KA	KB	M	MA	P	PA St=5	PA St>5	PB St=5	PB St>5	T
12	22	17	32	27	5	25	-	6	4	M3×0.5	6	5	6.5	4.5	M5×0.8Thru.hole:Φ4.2	12	16.2	10.2	1	M5×0.8	7.5	7.5	5	5	23
16	24	18.5	34	28.5	5.5	29	-	6	4	M3×0.5	6	5	6.5	4.5	M5×0.8Thru.hole:Φ4.2	12	19.8	11	1.5	M5×0.8	8	8	5.5	5.5	28
20	25	19.5	35	29.5	5.5	34	36	8	4	M4×0.7	8	6	6.5	4.5	M5×0.8Thru.hole:Φ4.2	14	24	13	1.5	M5×0.8	9	9	5.5	5.5	-
25	27	21	37	31	6	40	42	10	4	M5×0.8	10	8	8.2	5.5	M6×1.0Thru.hole:Φ5.2	15	28	17	2	M5×0.8	9	9	5.5	5.5	-
32	31.5	24.5	41.5	34.5	7	44	50	12	4.5	M6×1.0	12	10	8.2	5.5	M6×1.0Thru.hole:Φ5.2	16	34	22	2.5	1/8"	9	9	6.5	9	-
40	33	26	43	36	7	52	58.5	16	4	M8×1.25	12	14	10.5	6.5	M8×1.25Thru.hole:Φ6.7	20	40	28	3	1/8"	9.5	9.5	7.5	7.5	-
50	37	28	47	38	9	62	71.5	20	5	M10×1.5	15	17	10.5	6.5	M8×1.25Thru.hole:Φ6.7	25	48	38	4	1/4"	8	10.5	8	10.5	-
63	41	32	51	42	9	75	84.5	20	5	M10×1.5	15	17	10.5	6.5	M8×1.25Thru.hole:Φ6.7	25	60	40	4	1/4"	9.5	12	9.5	11	-
80	52	41	62	51	11	94	104	25	6	M14×1.5	20	22	17	11	M12×1.75Thru.hole:Φ10.4	25	74	45	5	3/8"	11.5	14.5	11.5	14.5	-
100	63	51	73	61	12	114	124	32	7	M18×1.5	20	27	19	13	M14×2.0Thru.hole:Φ12.4	30	90	55	5	3/8"	16	20.5	16	20.5	-

Male thread Φ12\Φ16

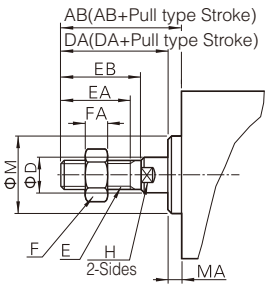

Φ20~Φ100

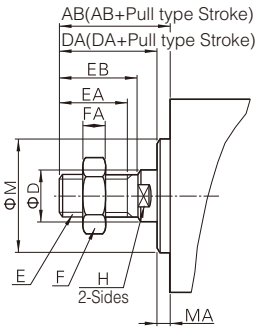

Bore size\Item	AB	D	DA	E	EA	EB	F	FA	H	M	MA SDAD\SDAJ	MA Others
12	17	6	16	M5×0.8	10	12	8	4	5	10.2	1	1
16	17.5	6	16	M5×0.8	10	12	8	4	5	11	1.5	1.5
20	20.5	8	19	M6×1.0	13	15	10	5	6	13	1.5	1.5
25	23	10	21	M8×1.25	15	17	12	6	8	17	2	2
32	25	12	22	M10×1.25	15	18	17	6	10	22	3	2.5
40	35	16	32	M14×1.5	25	28	19	8	14	28	3	3
50	37	20	33	M18×1.5	25	28	27	11	17	38	4	4
63	37	20	33	M18×1.5	25	28	27	11	17	40	4	4
80	44	25	39	M22×1.5	30	33	32	13	22	45	5	5
100	50	32	45	M26×1.5	35	38	36	13	27	55	5	5

SSA

Φ12\Φ16

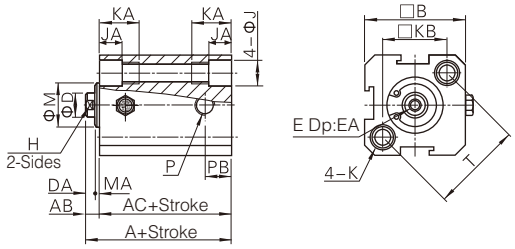

Φ20~Φ63

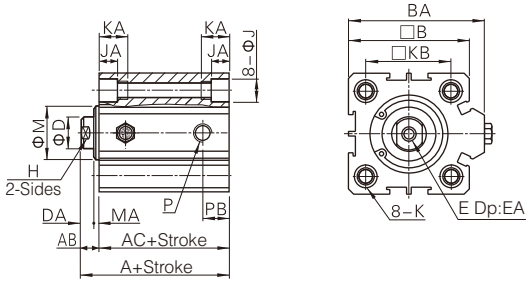

STA

Φ12\Φ16

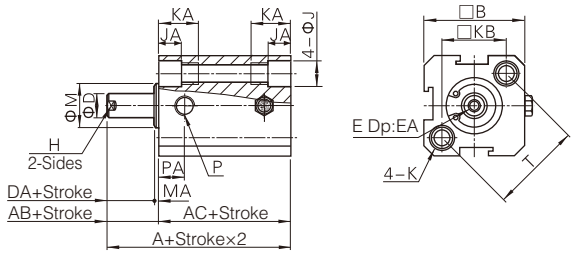

Φ20~Φ63

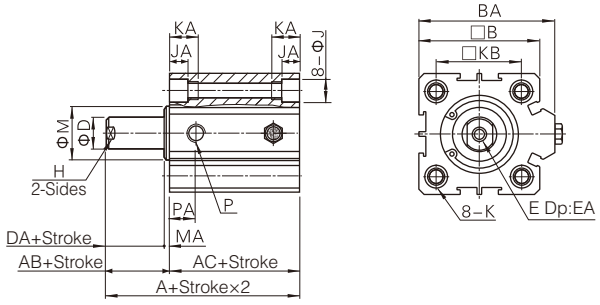

Item	A(Without magnet)		A(With magnet)		AB	AC(Without magnet)		AC(With magnet)		B	BA
Bore size	St≤10	St>10	St≤10	St>10		St≤10	St>10	St≤10	St>10		
12	32	42	42	52	5	27	37	37	47	25	-
16	34	44	44	54	5.5	28.5	38.5	38.5	48.5	29	-
20	35	45	45	55	5.5	29.5	39.5	39.5	49.5	34	36
25	37	47	47	57	6	31	41	41	51	40	42
32	41.5	51.5	51.5	61.5	7	34.5	44.5	44.5	54.5	44	50
40	43	53	53	53	7	36	46	46	56	52	58.5
50	47	57	57	67	9	38	48	48	58	62	71.5
63	51	61	61	71	9	42	52	52	62	75	84.5

Bore size\Item	D	DA	E	EA	H	J	JA	K	KA	KB	M	MA	P	PA	PB	T
12	6	4	M5×0.8	6	5	6.5	4.5	M5×0.8 Thru.hole:Φ4.2	12	16.2	10.2	1	M5×0.8	7.5	5	23
16	6	4	M5×0.8	6	5	6.5	4.5	M5×0.8 Thru.hole:Φ4.2	12	19.8	11	1.5	M5×0.8	8	5.5	28
20	8	4	M5×0.8	8	6	6.5	4.5	M5×0.8 Thru.hole:Φ4.2	14	24	13	1.5	M5×0.8	9	5.5	-
25	10	4	M6×1.0	10	8	8.2	5.5	M6×1.0 Thru.hole:Φ5.2	15	28	17	2	M5×0.8	9	5.5	-
32	12	4	M6×1.0	12	10	8.2	5.5	M6×1.0 Thru.hole:Φ5.2	16	34	22	2.4	1/8"	9	9	-
40	16	4	M8×1.25	12	14	10.5	6.5	M8×1.25 Thru.hole:Φ6.7	20	40	28	3	1/8"	9.5	7.5	-
50	20	5	M8×1.25	15	17	10.5	6.5	M8×1.25 Thru.hole:Φ6.7	25	48	38	4	1/4"	10.5	10.5	-
63	20	5	M8×1.25	15	17	10.5	6.5	M8×1.25 Thru.hole:Φ6.7	25	60	40	4	1/4"	12	11	-

SDAD

Φ12\Φ16

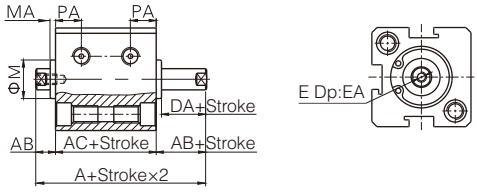

Φ20~Φ63

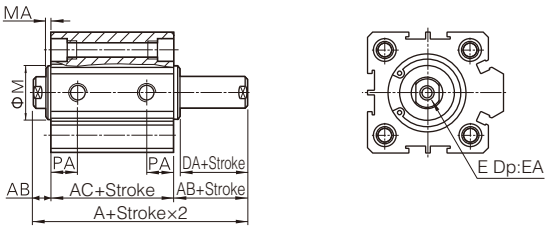

Bore size\Item	A	AC	A	AC	AB	DA	E	EA		M	MA	PA	
	Without magnet		With magnet					St≤10	St>10			St=5	St>5
12	27	17	37	27	5	4	M3×0.5	6	6	10.2	1	5.5	6.3
16	29.5	18.5	39.5	28.5	5.5	4	M3×0.5	6	6	11	1.5	6.5	7.3
20	30.5	19.5	40.5	29.5	5.5	4	M4×0.7	8(6.5 for St=5)		15	1.5	7.5	7.5
25	33	21	43	31	6	4	M5×0.8	10(7 for St=5)		17	2	8	8
32	38.5	24.5	48.5	34.5	7	4	M6×1.0	8	12	22	3	8	9
40	40	26	50	36	7	4	M8×1.25	8	12	28	3	8	10
50	46	28	56	38	9	5	M10×1.5	8	15	38	4	8	10.5
63	50	32	60	42	9	5	M10×1.5	10	15	40	4	9.5	11.8
80	63	41	73	51	11	6	M14×1.5	13	20	45	5	11.5	14.5
100	75	51	85	61	12	7	M18×1.5	18	20	55	5	16	20.5

Note) The unmarked dimension is the same as SDA standard type.

SDAJ

Φ12\Φ16

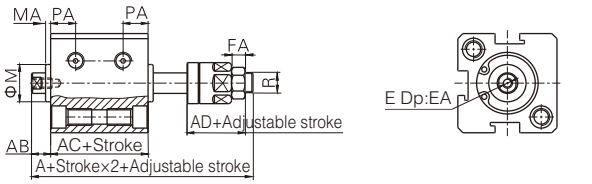

Φ20~Φ63

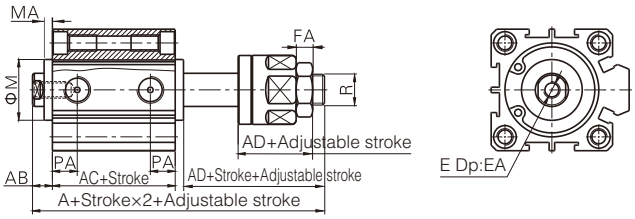

Bore size\Item	A	AC	A	AC	AB	AD	E	EA		FA	M	MA	PA		R
	Without magnet		With magnet					St≤10	St>10				St=5	St>5	
12	40	17	50	27	5	17	M3×0.5	6	6	4	10.2	1	5.5	6.3	M5×0.8
16	42.5	18.5	52.5	28.5	5.5	17	M3×0.5	6	6	4	11	1.5	6.5	7.3	M5×0.8
20	47.5	19.5	57.5	29.5	5.5	21	M4×0.7	8(6.5 for St=5)		5	15	1.5	7.5	7.5	M6×1.0
25	54	21	64	31	6	25	M5×0.8	10(7 for St=5)		6	17	2	8	8	M8×1.25
32	61.5	24.5	71.5	34.5	7	27	M6×1.0	8	12	6	22	3	8	9	M10×1.25
40	64	26	74	36	7	28	M8×1.25	8	12	7	28	3	8	10	M12×1.25
50	70	28	80	38	9	29	M10×1.5	8	15	8	38	4	8	10.5	M16×1.5
63	74	32	84	42	9	29	M10×1.5	10	15	8	40	4	9.5	11.8	M16×1.5
80	92.5	41	102.5	51	11	35.5	M14×1.5	13	20	10	45	5	11.5	14.5	M20×1.5
100	110.5	51	120.5	61	12	42.5	M18×1.5	18	20	13.5	55	5	16	20.5	M27×2.0

Note) The unmarked dimension is the same as SDA standard type.

SDAT

Φ12\Φ16

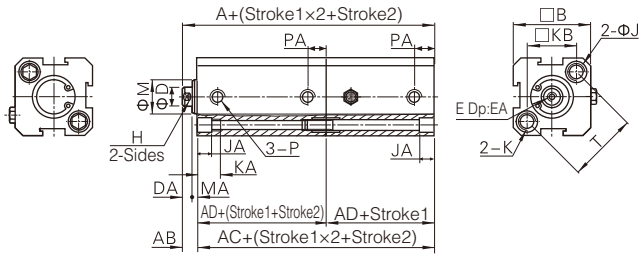

Φ20~Φ100

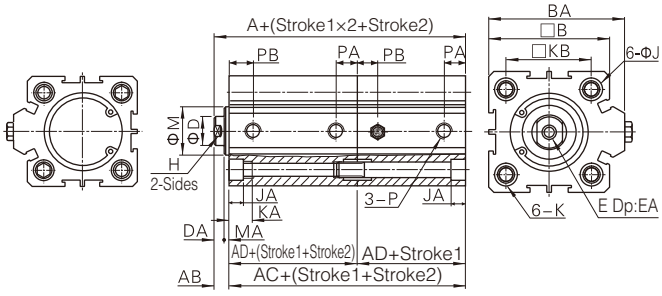

Item	A	AC	AD	A	AC	AD	AB	B	BA	D	DA	E	EA	H	J	JA	K	KA	KB	M	MA	P	PA		PB	
Bore size	Without magnet			With magnet																			St=5	St>5	St=5	St>5
12	39	34	17	59	54	27	5	25	-	6	4	M3×0.5	6	5	6.5	4.5	M5×0.8 Thru.hole:Φ4.2	12	16.2	10.2	1	M5×0.8	5	5	7.5	7.5
16	42.5	37	18.5	62.5	57	28.5	5.5	29	-	6	4	M3×0.5	6	5	6.5	4.5	M5×0.8 Thru.hole:Φ4.2	12	19.8	11	1.5	M5×0.8	5.5	5.5	8	8
20	44.5	39	19.5	64.5	59	29.5	5.5	34	36	8	4	M4×0.7	8	6	6.5	4.5	M5×0.8 Thru.hole:Φ4.2	14	24	13	1.5	M5×0.8	5.5	5.5	9	9
25	48	42	21	68	62	31	6	40	42	10	4	M5×0.8	10	8	8.2	5.5	M6×1.0 Thru.hole:Φ5.2	15	28	17	2	M5×0.8	5.5	5.5	9	9
32	56	49	24.5	76	69	34.5	7	44	50	12	4	M6×1.0	12	10	8.2	5.5	M6×1.0 Thru.hole:Φ5.2	16	34	22	2.5	1/8"	6.5	9	9	9
40	59	52	26	79	72	36	7	52	58.5	16	4	M8×1.25	12	14	10.5	6.5	M8×1.25 Thru.hole:Φ6.7	20	40	28	3	1/8"	7.5	7.5	9.5	9.5
50	65	56	28	85	76	38	9	62	71.5	20	5	M10×1.5	15	17	10.5	6.5	M8×1.25 Thru.hole:Φ6.7	25	48	38	4	1/4"	8	10.5	8	10.5
63	73	64	32	93	84	42	9	75	84.5	20	5	M10×1.5	15	17	10.5	6.5	M8×1.25Thru.hole:Φ6.7	25	60	40	4	1/4"	9.5	11	9.5	12
80	93	82	41	113	102	51	11	94	104	25	6	M14×1.5	20	22	17	11	M12×1.75 Thru.hole:Φ10.4	25	74	45	5	3/8"	11.5	14.5	11.5	14.5
100	114	102	51	134	122	61	12	114	124	32	7	M18×1.5	20	27	19	13	M14×2.0 Thru.hole:Φ12.4	30	90	55	5	3/8"	16	20.5	16	20.5

SDAW

Φ12\Φ16

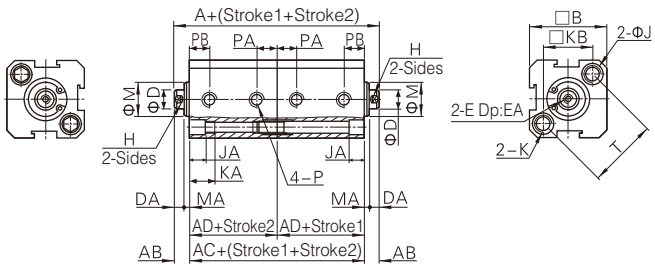

Φ20~Φ100

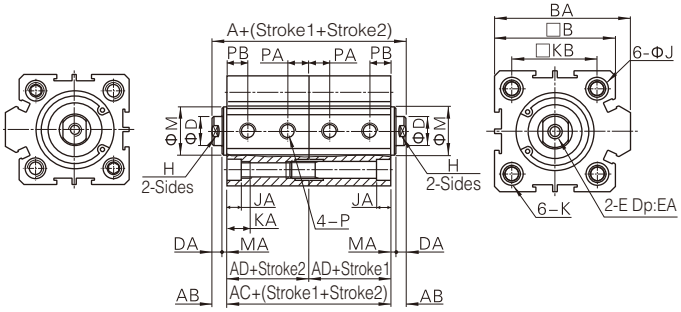

Item	A	AC	AD	A	AC	AD	AB	B	BA	D	DA	E	EA	H	J	JA	K	KA	KB	M	MA	P	PA		PB	
Bore size	Without magnet			With magnet																			St=5	St>5	St=5	St>5
12	44	34	17	64	54	27	5	25	-	6	4	M3×0.5	6	5	6.5	4.5	M5×0.8 Thru.hole:Φ4.2	12	16.2	10.2	1	M5×0.8	5	5	7.5	7.5
16	48	37	18.5	68	57	28.5	5.5	29	-	6	4	M3×0.5	6	5	6.5	4.5	M5×0.8 Thru.hole:Φ4.2	12	19.8	11	1.5	M5×0.8	5.5	5.5	8	8
20	50	39	19.5	70	59	29.5	5.5	34	36	8	4	M4×0.7	8	6	6.5	4.5	M5×0.8 Thru.hole:Φ4.2	14	24	13	1.5	M5×0.8	5.5	5.5	9	9
25	54	42	21	74	62	31	6	40	42	10	4	M5×0.8	10	8	8.2	5.5	M6×1.0 Thru.hole:Φ5.2	15	28	17	2	M5×0.8	5.5	5.5	9	9
32	63	49	24.5	83	69	34.5	7	44	50	12	4	M6×1.0	12	10	8.2	5.5	M6×1.0 Thru.hole:Φ5.2	16	34	22	2.5	1/8"	6.5	9	9	9
40	66	52	26	86	72	36	7	52	58.5	16	4	M8×1.25	12	14	10.5	6.5	M8×1.25 Thru.hole:Φ6.7	20	40	28	3	1/8"	7.5	7.5	9.5	9.5
50	74	56	28	94	76	38	9	62	71.5	20	5	M10×1.5	15	17	10.5	6.5	M8×1.25 Thru.hole:Φ6.7	25	48	38	4	1/4"	8	10.5	8	10.5
63	82	64	32	102	84	42	9	75	84.5	20	5	M10×1.5	15	17	10.5	6.5	M8×1.25Thru.hole:Φ6.7	25	60	40	4	1/4"	9.5	11	9.5	12
80	104	82	41	124	102	51	11	94	104	25	6	M14×1.5	20	22	17	11	M12×1.75 Thru.hole:Φ10.4	25	74	45	5	3/8"	11.5	14.5	11.5	14.5
100	126	102	51	146	122	61	12	114	124	32	7	M18×1.5	20	27	19	13	M14×2.0 Thru.hole:Φ12.4	30	90	55	5	3/8"	16	20.5	16	20.5

Symbol

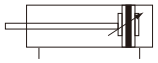

Ordering code

ADVU **50** **80** **A** **P** **A**

Model | **Bore size** | **Stroke** | **Rod end thread** | **Buffer form** | **Position sensing**

Rod end thread

Blank	Internal thread
A	External thread

Buffer form

P	Double ended unadjustable buffer

Position sensing

A	By approaching sensor

Specifications

Bore size(mm)		12	16	20	25	32	40	50	63	80	100	125
Working medium		Double action										
Action pattern		Air										
Withstand voltage		1.5Mpa										
Working pressure		1.0Mpa										
Port size		M5	M5	M5	M5	G1/8	G1/8	G1/8	G1/8	G1/8	G1/4	G1/4
Piston rod terminal	Internal thread	M3	M4	M5	M5	M6	M6	M8	M8	M10	M12	M16
	External thread	M6	M8	M10×1.25				M12×1.25		M16×1.5	M20×1.5	M27×2
Buffer form		Dual-ended with non-adjustable buffer										
Position sensing		Using proximity sensors										
Installation form		Installation through through through-hole										-
		Installation through internal threads										
		Installation through accessories										
Installation location		Arbitrarily										

Dimensions

Φ12-100mm

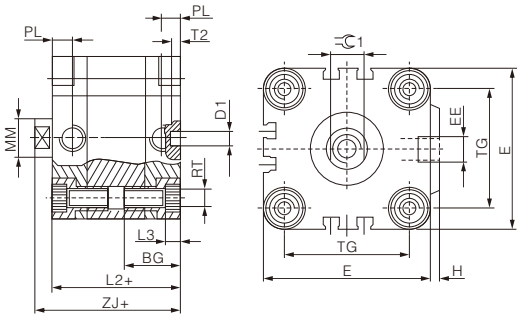

Φ125mm

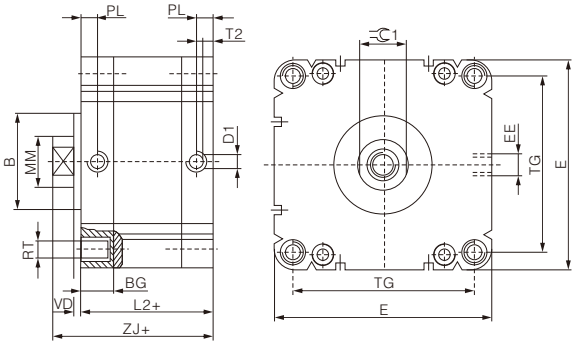

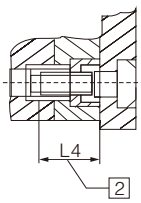

+=Add travel length

2 Minimum spinning depth

Minimum spinning depth 18 mm

Can't screw the hexagonal screw to the bottom

+=Add travel length

Note: When installing Φ12 and Φ16 mm cylinders from the upper part, the two installation screws are diagonally distributed, and the other arrangement can only use non-magnetic screws.

Bore size \ Symbol	Bd11	BG	D1ΦH9	E	EE	H	L2	L3	L4	MMΦ	PL	RT	T2-0.2	TG	VD	ZJ	⊂1 h13
12	-	18.5	6	29	M5	1	38	3	16	6	8	M4	4	18	-	42.-5	5
16	-	18.5	6	29	M5	1	38	3	16	8	8	M4	4	18	-	42.5	7
20	-	18.5	6	36	M5	1.5	38	4	18	10	8	M5	4	22	-	42.5	9
25	-	18.5	6	40	M5	1.5	39.5	4	18	10	8	M5	4	26	-	45	9
32	-	21.5	6	50	G1/8	2	44.5	5	20	12	8	M6	4	32	-	50.5	10
40	-	21.5	6	60	G1/8	2.5	45.5	5	20	12	8	M6	4	42	-	52	10
50	-	22	6	68	G1/8	3	45.5	6	20	16	8	M8	4	50	-	53	13
63	-	24.5	8	87	G1/8	4	50	8	25	16	8	M10	4	62	-	57.5	13
80	-	27.5	8	107	G1/8	4	56	8	25	20	8.5	M10	4	82	-	64	17
100	-	32.5	8	128	G1/4	5	66.5	8	25	25	10.5	M10	4	103	-	76.5	22
125	60	19.5	10	132	G1/4	-	81	-	18	25	10.5	M12	6	110	4	99	27



Symbol

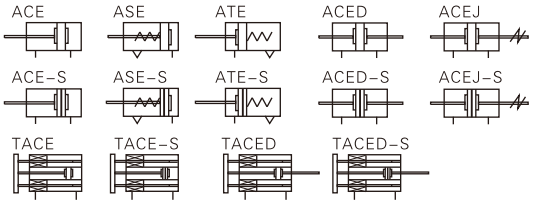

Product feature

1. In accordance with ISO21287 standard, the mounting size is vogue.
2. The cylinder body connects with the threads of the front and back cover, forming high strength and convenient maintenance.
3. The internal diameter of the body is treated with rolling followed by the treatment of hard anodizing, forming an excellent abrasion resistance and durability.
4. The seal of piston adopts heterogeneous two-way seal structure. It has compact dimension and the function of oil reservation.
5. Compact structure can effectively save fifty percent installation space with ISO15552 standard cylinder.
6. There are magnetic switch slots around the cylinder body, which is convenient to install inducting switch.
7. Bumper is available and it can availably absorb excrescent energy.
8. Installing accessorirs with various specifications are optional.

Specifications

Bore size(mm)		12	16	20	25	32	40	50	63	80	100	125
Acting type		Double acting										
		Single acting_ Push type, Single acting_ Pull type										-
Fluid		Air(to be filtered by 40μm filter element)										
Operating pressure	Double acting	0.15~1.0MPa(22~145psi)										
	Single acting	0.2~1.0MPa(28~145psi)										
Proof pressure		1.5MPa(215psi)										
Temperature ℃		-20~70										
Speed range mm/s		Double acting: 30~500, Single acting: 50~500										
Stroke tolerance		Stroke≤100 $^{+1.0}_{0}$ Stroke>100 $^{+1.5}_{0}$										
Cushion type		Bumper										
Port size [Note]		M5×0.8				1/8"						1/4"

[Note] PT thread, G thread and NPT thread are available.

Stroke

Bore size(mm)			Standard stroke (mm)	Max. stroke
Common type	Double acting	12	5 10 15 20 25 30 35 40 45 50	50
		16	5 10 15 20 25 30 35 40 45 50 55 60 70 75	75
		20	5 10 15 20 25 30 35 40 45 50 55 60 70 75 80 90 100	100
		25	5 10 15 20 25 30 35 40 45 50 55 60 70 75 80 90 100 110 120 125 150	150
		32 40	5 10 15 20 25 30 35 40 45 50 55 60 70 75 80 90 100 110 120 125 150 160 175 200	200
		50 63	5 10 15 20 25 30 35 40 45 50 55 60 70 75 80 90 100 110 120 125 150 160 175 200 225 250	250
		80 100 125	5 10 15 20 25 30 35 40 45 50 55 60 70 75 80 90 100 110 120 125 150 160 175 200 225 250 275 300	300
	Single acting	12	5 10	10
		16~100	5 10 15 20 25	25
Non-rotating with yoke	Double acting	12	5 10 15 20 25 30 35 40 45 50	50
		16	5 10 15 20 25 30 35 40 45 50 55 60 70 75	75
		20 25	5 10 15 20 25 30 35 40 45 50 55 60 70 75 80 90 100	100
		32 40	5 10 15 20 25 30 35 40 45 50 55 60 70 75 80 90 100	100
		50 63	5 10 15 20 25 30 35 40 45 50 55 60 70 75 80 90 100	100
		80 100	5 10 15 20 25 30 35 40 45 50 55 60 70 75 80 90 100	100

Note) 1. Please contact the company for other special strokes.
2. The dimensions of non-std stroke cylinder has the same dimensions as the next longer stroke std. stroke cylinder. e.g. 23mm stroke cylinder has the same dimensions of 25 std. stroke cylinder.

Ordering code

ACE / **ACED** / **ACEJ** **20 × 30** **30 – S B**

Model

ACE	Compact cylinder(Double acting)
ASE	Compact cylinder(Single acting-push)
ATE	Compact cylinder(Single acting-pull)
ACED	Compact cylinder(Double rod)
ACEJ	Compact cylinder(Adjustable stroke)
TACE	Compact cylinder (Double acting non-rotating with yoke)
TACED	Compact cylinder (Double rod non-rotating with yoke)

Bore size

Mobel	Bore size
ACE ACED/ACEJ	12 16 20 25 32 40 50 63 80 100 125
ASE/ATE ACED/ACEJ	12 16 20 25 32 40 50 63 80 100

Stroke

Refer to stroke table for details

Adjustable Stroke

ACEJ	10: 10mm
	20: 20mm
	30: 30mm
	40: 40mm
	50: 50mm
	75: 75mm
	100: 100mm
Others	No this code

Magnet code

Blank	Without magnet
S	With magnet

Rod type

ACE/ASE/ATE ACED/ACEJ	Blank: Female thread
	B: Male thread
TACE/TACED	No this code

Mounting type [Note 2]

All model	Blank: No accessories
ACE ASE ATE	FA: FA type
	FB: FB type
	CA: CA type
	CB: CB type
	CR: CR type
	FTC: FTC type
	LB: LB type
	SDB: SDB type
ACED ACEJ	FA: FA type
	FTC: FTC type
	LB: LB type
TACE	FB: FB type
	CA: CA type
	CB: CB type
	CR: CR type
	FTC: FTC type
TACED	FB: FB type

Thread type [Note 1]

Blank	PT
G	G
T	NPT

Note: 1. Standard thread is blank here.
2. CR must be used with CA, FTC must be used with TCM2.

Inner structure and material of major parts

ACE-S

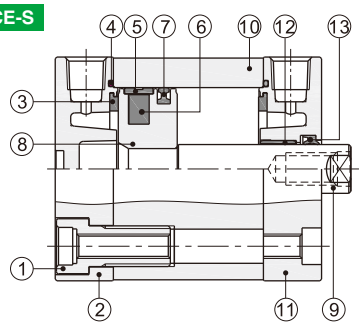

TACE-S

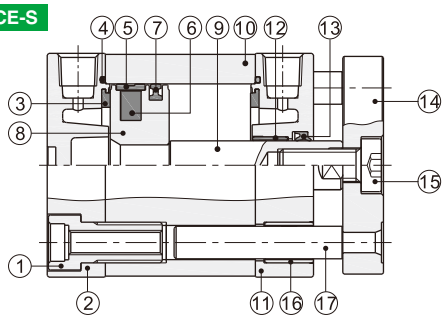

NO.	Item	Material
1	Screw	Carbon steel
2	Back cover	Aluminum alloy
3	Bumper	TPU
4	O-ring	NBR
5	Wear ring	No(Φ12~20)\Wear resistant material(Others)
6	Magnet	Sintered metal(Neodymium-iron-boron)(Φ12~20)\Plastic(Others)
7	Piston seal	NBR
8	Piston	Aluminum alloy
9	Piston rod	S45C
10	Body	Aluminum alloy
11	Front cover	Aluminum alloy
12	Bushing	No(Φ12~20)\Wear resistant material(Others)
13	Front cover packing	NBR
14	Panal	Aluminum alloy
15	Screw	Carbon steel
16	Bushing	Wear resistant material
17	Guide rod	Stainless steel(Φ12~40)\S45C(Others)

Dimensions

ACE

Φ12

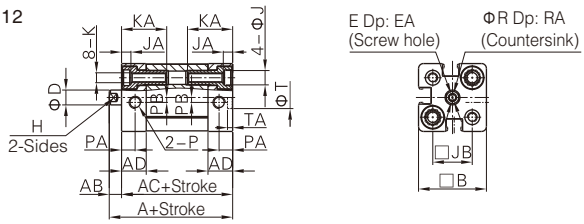

Φ16~Φ25

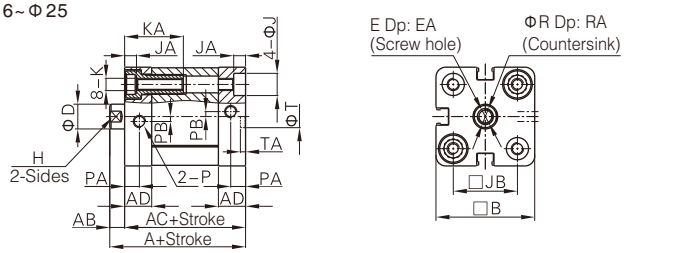

Φ32~Φ63

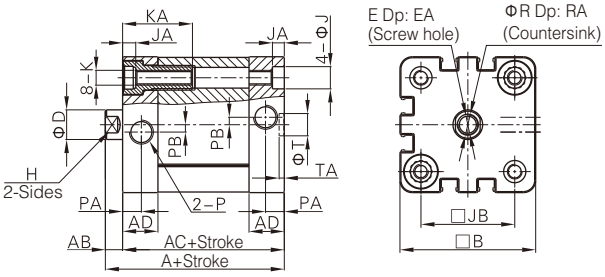

Φ80~Φ125

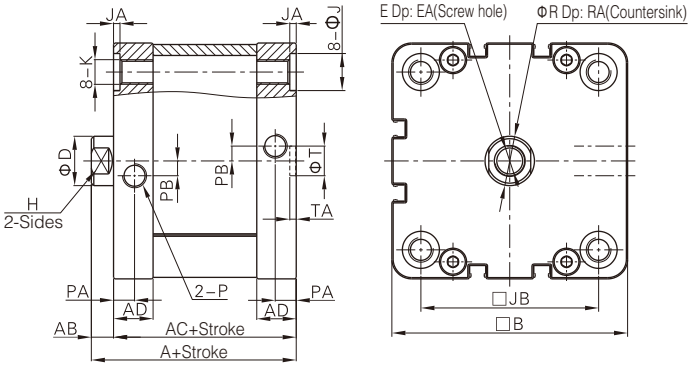

Bore size\Item	A	AB	AC	AD	B	D	E	EA	H	J	JA	JB	K	KA	P	PA	PB	R	RA	T	TA
12	40	5	35	10	27.5	6	M3×0.5	8	5	6	3.5	16	M4×0.7	18.5	M5×0.8	5.5	2	3.5	1.5	9	2.1
16	40	5	35	10	30	8	M4×0.7	10	7	6	3.5	18	M4×0.7	18.5	M5×0.8	5.5	2	4.5	1.5	9	2.1
20	43	6	37	10.5	35.5	10	M6×1.0	14	9	9	4.5	22	M5×0.8	23.5	M5×0.8	6	2	6.5	2.5	9	2.1
25	45	6	39	11	40	10	M6×1.0	14	9	9	4.5	26	M5×0.8	23.5	M5×0.8	6	2	6.5	2.5	9	2.1
32	51	7	44	14	49.5	12	M8×1.25	16	10	9	4.5	32.5	M6×1.0	28.5	G1/8	7.5	3	8.5	3.5	9	2.1
40	52.5	7	45.5	14.5	55	12	M8×1.25	16	10	9	4.5	38	M6×1.0	28.5	G1/8	7.5	3	8.5	3.5	9	2.1
50	53.5	8	45.5	14.5	65.5	16	M10×1.5	20	13	11	4.5	46.5	M8×1.25	30.5	G1/8	7.5	3	10.5	4.5	12	2.6
63	57	8	49	15	75.5	16	M10×1.5	20	13	11	4.5	56.5	M8×1.25	30.5	G1/8	7.5	4	10.5	4.5	12	2.6
80	63	9	57	16	95.5	20	M12×1.75	20	17	15	2.5	72	M10×1.5	-	G1/8	8.5	6	12.5	6	12	2.6
100	76	9	67	19	113.5	20	M12×1.75	20	17	15	2.5	89	M10×1.5	-	G1/8	10.5	7	12.5	6	12	2.6
125	92	11	81	20	134.5	25	M16×2.0	25	21	-	-	110	M12×1.75	-	G1/4	10.5	8	16.5	7	12	2.6

Remark: The dimensions of magnet type cylinder are the same as non-magnet type cylinder.

ASE

Φ12

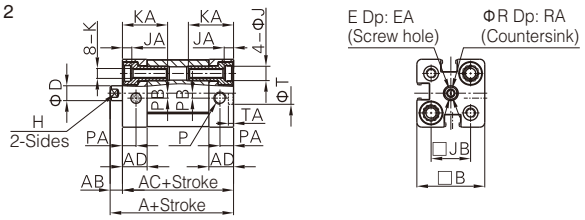

Φ16~Φ25

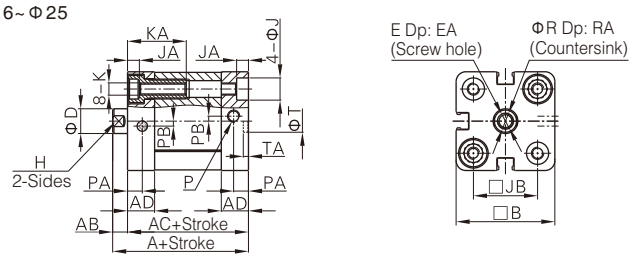

Φ32~Φ63

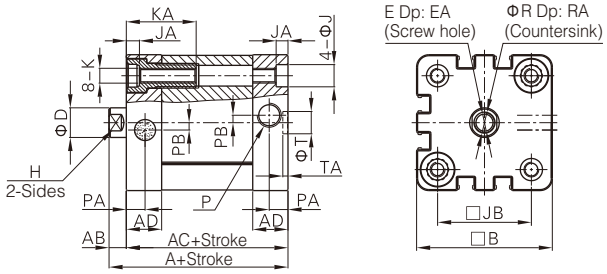

Φ80\Φ100

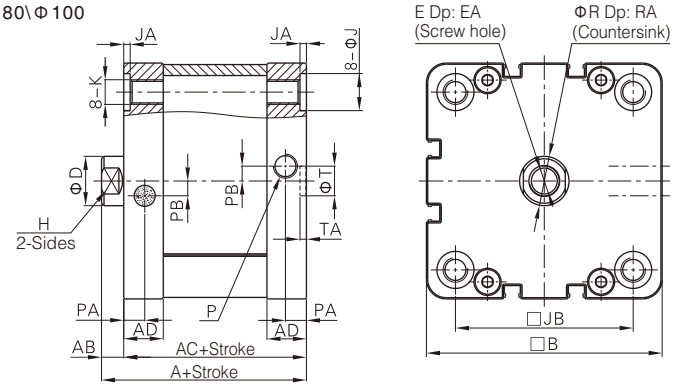

ATE

Φ12

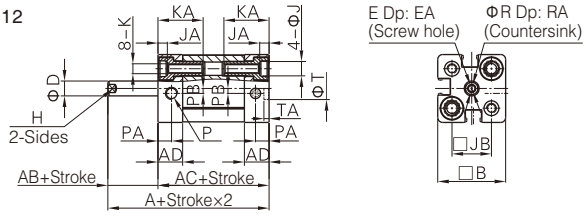

Φ16~Φ25

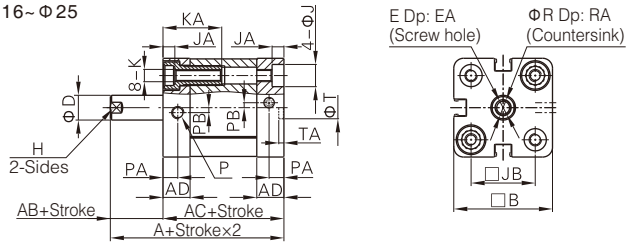

Φ32~Φ63

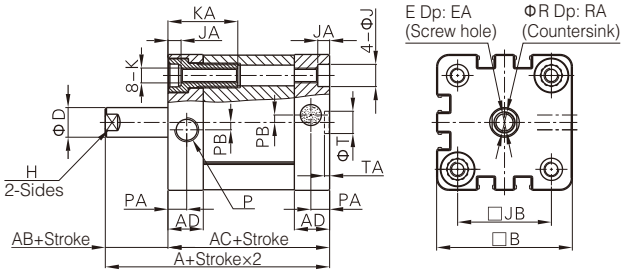

Φ80\Φ100

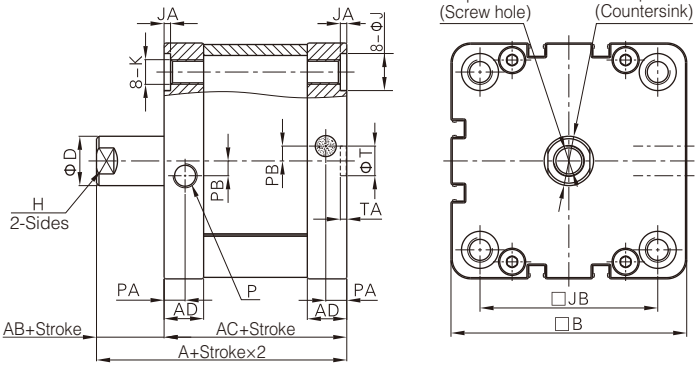

Bore size\Item	A	AB	AC	AD	B	D	E	EA	H	J	JA	JB	K	KA	P	PA	PB	R	RA	T	TA
12	40	5	35	10	27.5	6	M3×0.5	8	5	6	3.5	16	M4×0.7	18.5	M5×0.8	5.5	2	3.5	1.5	9	2.1
16	40	5	35	10	30	8	M4×0.7	10	7	6	3.5	18	M4×0.7	18.5	M5×0.8	5.5	2	4.5	1.5	9	2.1
20	43	6	37	10.5	35.5	10	M6×1.0	14	9	9	4.5	22	M5×0.8	23.5	M5×0.8	6	2	6.5	2.5	9	2.1
25	45	6	39	11	40	10	M6×1.0	14	9	9	4.5	26	M5×0.8	23.5	M5×0.8	6	2	6.5	2.5	9	2.1
32	51	7	44	14	49.5	12	M8×1.25	16	10	9	4.5	32.5	M6×1.0	28.5	G1/8	7.5	3	8.5	3.5	9	2.1
40	52.5	7	45.5	14.5	55	12	M8×1.25	16	10	9	4.5	38	M6×1.0	28.5	G1/8	7.5	3	8.5	3.5	9	2.1
50	53.5	8	45.5	14.5	65.5	16	M10×1.5	20	13	11	4.5	46.5	M8×1.25	30.5	G1/8	7.5	3	10.5	4.5	12	2.6
63	57	8	49	15	75.5	16	M10×1.5	20	13	11	4.5	56.5	M8×1.25	30.5	G1/8	7.5	4	10.5	4.5	12	2.6
80	63	9	57	16	95.5	20	M12×1.75	20	17	15	2.5	72	M10×1.5	-	G1/8	8.5	6	12.5	6	12	2.6
100	76	9	67	19	113.5	20	M12×1.75	20	17	15	2.5	89	M10×1.5	-	G1/8	10.5	7	12.5	6	12	2.6

Remark: The dimensions of magnet type cylinder are the same as non-magnet type cylinder.

ACED

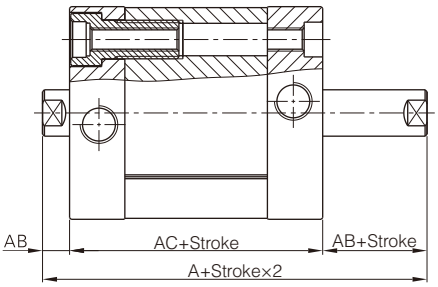

ACEJ

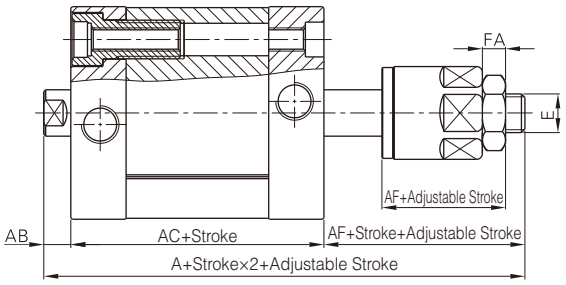

Bore size\Item	A(ACED)	A(ACEJ)	AB	AC	AF	FA	E
12	45	57	5	35	17	4	M5×0.8
16	45	61	5	35	21	5	M6×1.0
20	49	68	6	37	25	6	M8×1.25
25	51	70	6	39	25	6	M8×1.25
32	58	78	7	44	27	6	M10×1.25
40	59.5	79.5	7	45.5	27	6	M10×1.25
50	61.5	81.5	8	45.5	28	7	M12×1.25
63	65	85	8	49	28	7	M12×1.25
80	72	92	9	54	29	8	M16×1.5
100	85	105	9	67	29	8	M16×1.5
125	103	127.5	11	81	35.5	10	M20×1.5

Remark:
1. The unmarkde dimension is the same as ACE standard type
2. The dimensions of magnet type cylinder are the same as non-magnet type cylinder.

TACE

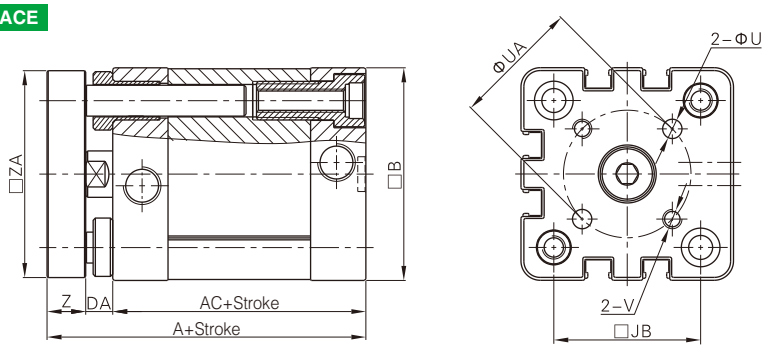

TACED

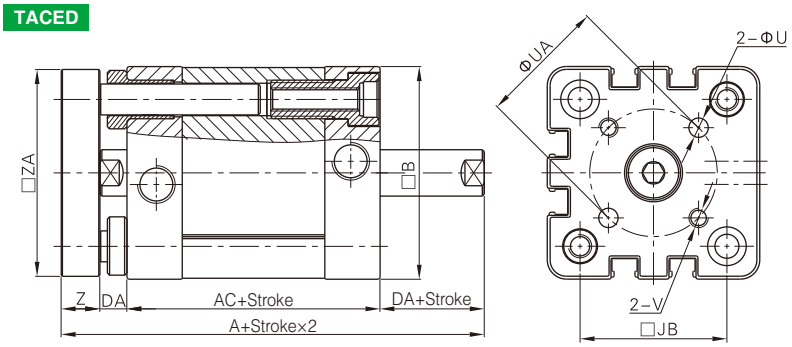

Bore size\Item	A(TACE)	A(TACED)	AC	B	DA	JB	U	UA	V	Z	ZA
12	46	51	35	27.5	5	16	3	12	M3×0.5	6	26.5
16	46	51	35	30	5	18	3	14	M3×0.5	6	29
20	51	57	37	35.5	6	22	5	17	M4×0.7	8	34.5
25	53	59	39	40	6	26	5	22	M5×0.8	8	39
32	61	68	44	49.5	7	32.5	5	28	M5×0.8	10	48
40	62.5	69.5	45.5	55	7	38	5	33	M5×0.8	10	53.5
50	65.5	73.5	45.5	65.5	8	46.5	6	42	M6×1.0	12	64
63	69	77	49	75.5	8	56.5	6	50	M6×1.0	12	74
80	77	86	54	95.5	9	72	8	65	M8×1.25	14	94
100	90	99	67	113.5	9	89	10	80	M10×1.5	14	112

Remark:
1. The unmarkde dimension is the same as ACE standard type
2. The dimensions of magnet type cylinder are the same as non-magnet type cylinder.

Male thread

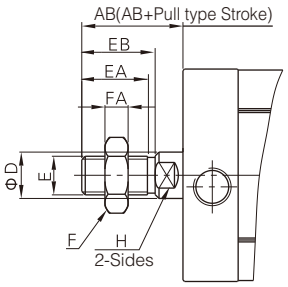

Bore size\Item	AB	D	E	EA	EB	F	FA	H
12	15	6	M5×0.8	9	10	8	4	5
16	17	8	M6×1.0	11	12	10	5	7
20	22	10	M8×1.25	15	16	12	6	9
25	22	10	M8×1.25	15	16	12	6	9
32	26	12	M10×1.25	17	19	17	6	10
40	26	12	M10×1.25	17	19	17	6	10
50	30	16	M12×1.25	20	22	17	7	13
63	30	16	M12×1.25	20	22	17	7	13
80	34	20	M16×1.5	26	28	23	8	17
100	34	20	M16×1.5	26	28	23	8	17
125	51	25	M20×1.5	38	40	26	10	21

List for ordering code of accessories

Accessories Bore size	Mounting accessories								Knuckle				Sensor switch	
	LB	FA/FB	CA	CB	CR	SDB	FTC	TCM2	I	Y	F	U	CS1-E	DS1-E
12	F-ACE12LB	F-ACE12FA	F-ACE12CA	-	-	F-MI12SDB	-	-	F-ACQ12I	F-ACQ12Y	F-M5×080F	F-M5×080U	CS1-E	DS1-E
16	F-ACP12LB	F-ACE16FA	F-ACE16CA	-	-	F-MI12SDB	-	-	F-M6×100I	F-M6×100Y	F-M6×100F	F-M6×100U		
20	F-ACP20LB	F-ACE20FA	F-ACE20CA	-	-	F-MI20SDB	-	-	F-M8×125I	F-M8×125Y	F-M8×125F	F-M8×125U		
25	F-ACP25LB	F-ACE25FA	F-ACE25CA	-	-	F-MI20SDB	-	-						
32	F-ACE32LB	F-SI32FA	F-SE32CA	F-SE32CB	F-SI32CR	-	F-SI32FTC	F-SI32TCM2	F-M10×125I	F-M10×125Y	F-M10×125F	F-M10×125U		
40	F-ACE40LB	F-SI40FA	F-SE40CA	F-SE40CB	F-SI40CR	-	F-SI40FTC	F-SI40TCM2						
50	F-ACE50LB	F-SI50FA	F-SE50CA	F-SE50CB	F-SI50CR	-	F-SI50FTC	F-SI50TCM2	F-M12×125I	F-M12×125Y	F-M12×125F	F-M12×125U		
63	F-ACE63LB	F-SI63FA	F-SE63CA	F-SE63CB	F-SI63CR	-	F-SI63FTC	F-SI63TCM2						
80	F-ACE80LB	F-SI80FA	F-SE80CA	F-SE80CB	F-SI80CR	-	F-SI80FTC	F-SI80TCM2	F-M16×150I	F-M16×150Y	F-M16×150F	F-M16×150U		
100	F-ACE100LB	F-SI100FA	F-SE100CA	F-SE100CB	F-SI100CR	-	F-SI100FTC	F-SI100TCM2						
125	-	F-SI125FA	F-SE125CA	F-SE125CB	F-SI125CR	-	F-SI125FTC	F-SI125TCM2	F-M20×150I	F-M20×150Y	F-M20×150F	F-M20×150U		

Accessory selection

Cylinder model\Accessories			Mounting accessories									Knuckle				Sensor switch	
			LB	FA	FB	CA	CB	CR	SDB	FTC	TCM2	I	Y	F	U	CS1-E	DS1-E
ACE	Female thread	Without magnet	●	●	●	●	●	●	●	●	●	×	×	×	×	×	×
		With magnet														●	●
	Male thread	Without magnet										●	●	●	●	×	×
		With magnet														●	●
ASE ATE	Female thread	Without magnet	●	●	●	●	●	●	●	●	●	×	×	×	×	×	×
		With magnet														●	●
	Male thread	Without magnet										●	●	●	●	×	×
		With magnet														●	●
ACED ACEJ	Female thread	Without magnet	●	●	×	×	×	×	×	●	●	×	×	×	×	×	×
		With magnet														●	●
	Male thread	Without magnet										●	●	●	●	×	×
		With magnet														●	●
TACE	Female thread	Without magnet	×	×	●	●	●	●	●	●	●	×	×	×	×	×	×
		With magnet														●	●
TACED	Female hread	Without magnet	×	×	×	●	×	×	×	×	×	×	×	×	×	×	×
		With magnet														●	●

Material of accessories

Accessories Bore size	Mounting accessories									Knuckle			
	LB	FA	FB	CA	CB	CR	SDB	FTC	TCM2	I	Y	F	U
12~25	△	●	●	●	–	–	△	■	●	□	□	□	□
32~100	△	●	●	●	◇	◇	–	■	●	□	□	□	□
125	–	◇	◇	◇	◇	◇	–	■	●	□	□	□	□

●——Aluminum alloy; ■——Cast iron; ◇——Ductile Iron; △——SPCC; □——Carbon Steel

Accessories Dimensions

LB

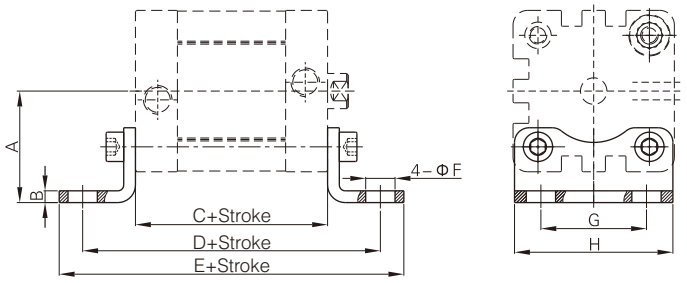

Bore size\Item	A	B	C	D	E	F	G	H
12	21	3	35	61	71	5.5	16	25
16	22	3	35	61	70.6	5.5	18	27
20	27	3.8	37	69	81.6	6.5	22	34
25	29	3.8	39	71	83.6	6.5	26	38
32	33.5	4	44	76	89	7	32	48
40	38	4	45.5	81.5	97.5	10	36	54
50	45	5	45.5	87.5	103.5	10	45	65
63	50	5	49	91	107	10	50	75
80	63	6	54	106	127	12	63	95
100	74	6	67	121	146	14.5	75	112

[Note] Valve C in the above table is only for ACE series.
Please refer to trlevant content for valve C of other series.

FA/FB

Φ12~Φ25

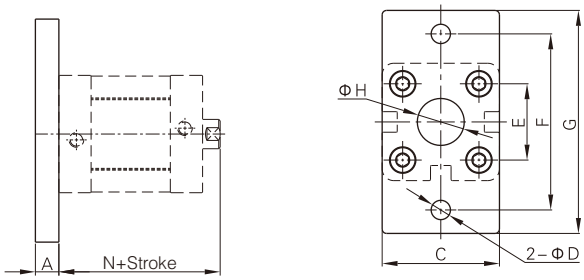

Φ32~Φ125

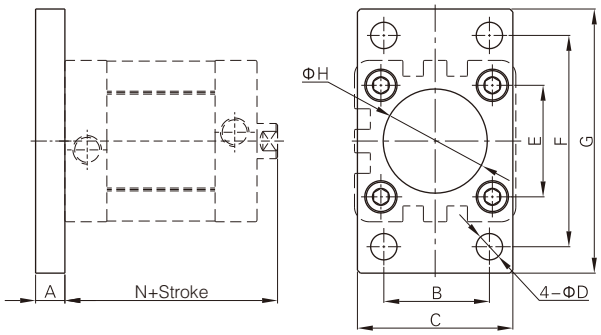

Bore size\Item	A	B	C	D	E	F	G	H	N
12	8	-	25	5.5	16	40	55	10	40
16	8	-	30	5.5	18	53	55	10	40
20	8	-	35	6.6	22	55	68	16	43
25	8	-	39.5	6.6	26	60	76	16	45
32	10	32	47	7	32.5	64	80	30.5	51
40	10	36	53	9	38	72	90	35.5	52.5
50	12	45	65	9	46.5	90	108	40.5	53.5
63	12	50	75	9	56.5	100	118	45.5	57
80	16	63	95	12.5	72	126	150	45.5	63
100	16	75	115	14.5	89	150	176	55.5	76
125	20	90	139	16.5	110	180	218	60.5	92

CA

Φ12~Φ25

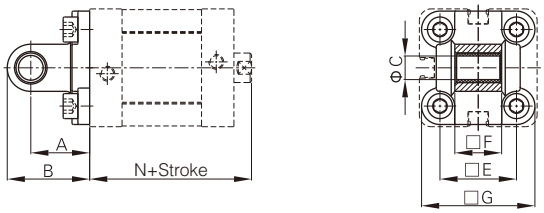

Φ32~Φ125

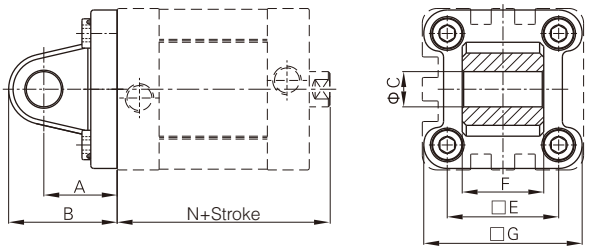

Bore size\Item	A	B	C	E	F	G	N
12	16	22	6	16	11.9	24	40
16	16	22	6	18	11.9	28.5	40
20	20	28	8	22	15.9	34.5	43
25	20	28	8	26	15.9	38.5	45
32	22	32.5	10	32.5	25.8	46.5	51
40	25	37	12	38	27.8	54	52.5
50	27	39	12	46.5	31.7	64	53.5
63	32	47	16	56.5	39.7	75	57
80	36	51.5	16	72	49.7	93	63
100	41	61	20	89	59.7	110	76
125	50	74	25	110	69.7	134	92

CB

Φ32~Φ125

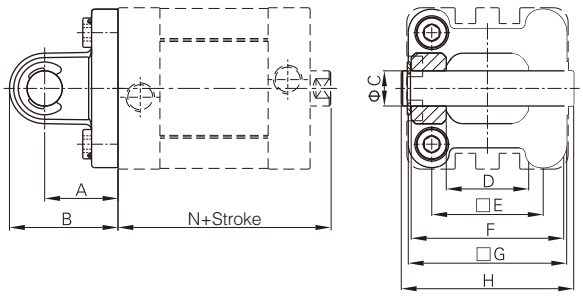

Bore size\Item	A	B	C	D	E	F	G	H	N
32	22	32.5	10	26	32.5	45	46.5	51	51
40	25	37	12	28	38	52	54	59	52.5
50	27	39	12	32	46.5	60	64	67	53.5
63	32	47	16	40	56.5	70	75	77	57
80	36	51.5	16	50	72	90	93	97	63
100	41	61	20	60	89	110	110	119	76
125	50	74	25	70	110	130	134	139	92

[Note] CB is attached with relevant PIN.

CR

Φ32~Φ125

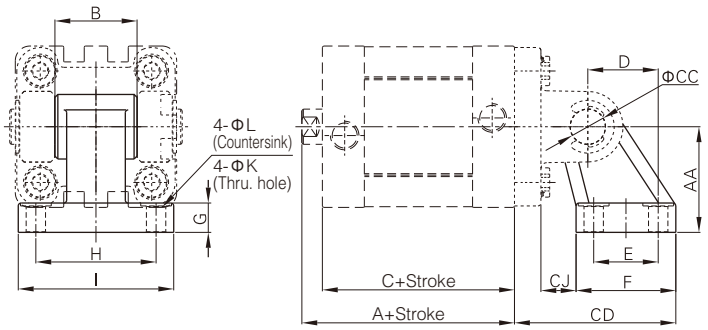

Bore size\Item	A	AA	B	C	CC	CD	CJ	D	E	F	G	H	I	K	L
32	51	32	26	44	10	50	10	21	18	31	8	38	51	6.6	11
40	52.5	36	28	45.5	12	56	12	24	22	35	10	41	54	6.6	11
50	53.5	45	32	45.5	12	68	13	33	30	45	12	50	65	9	14
63	57	50	40	49	16	77	17	37	55	50	12	52	67	9	14
80	63	63	50	54	16	93	19	47	40	60	14	66	86	11	17
100	76	71	60	67	20	106	22	55	50	70	15	76	96	11	17
125	92	90	70	81	25	135	26	70	60	90	20	94	124	14	20

[Note] CR cann't be used alone, it must be used with CB.

SDB

Φ12~Φ25

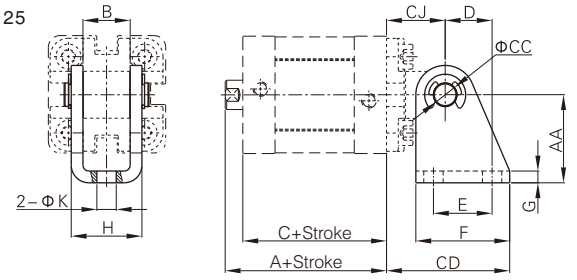

Bore size\Item	A	AA	B	C	CC	CD	CJ	D	E	F	G	H	K
12	40	27	12.1	35	6	34	16	13	15	25	2	18.1	5.5
16	40	27	12.1	35	6	34	16	13	15	25	2	18.1	5.5
20	43	30	16.1	37	8	42	20	16	20	32	2.5	24.1	6.6
25	45	30	16.1	39	8	42	20	16	20	32	2.5	24.1	6.6

[Note] SDB cann't be used alone, it must be used with CA.

FTC Φ32~Φ125

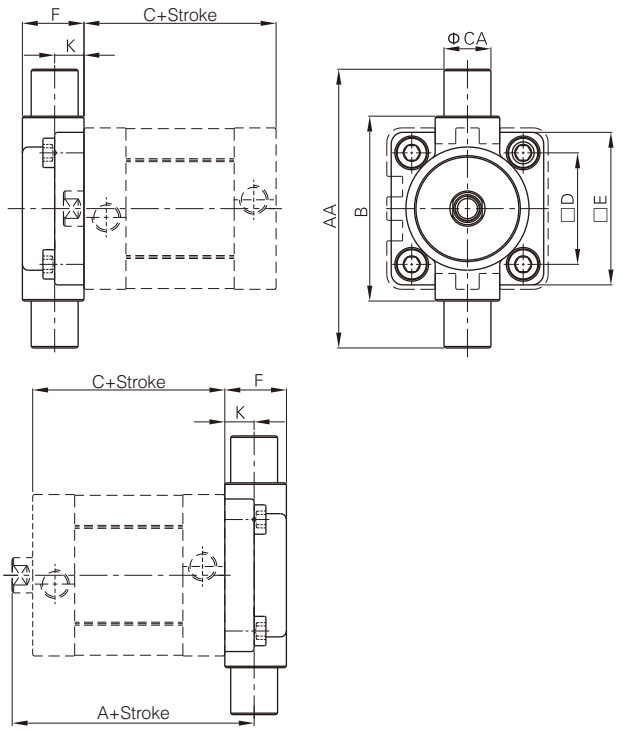

Bore size\Item	A	AA	B	C	CA	D	E	F	K
32	63	74	50	44	12	32.5	46	19	10
40	66.5	95	63	45.5	16	38	52	21	10
50	71.5	107	75	45.5	16	46.5	64	26	12
63	77	130	90	49	20	56.5	74	28	12
80	85	150	110	54	20	72	94	31	16
100	102	185	132	67	25	89	114	35	16
125	124	210	160	81	25	110	139	43	20

TCM2 Φ32~Φ125

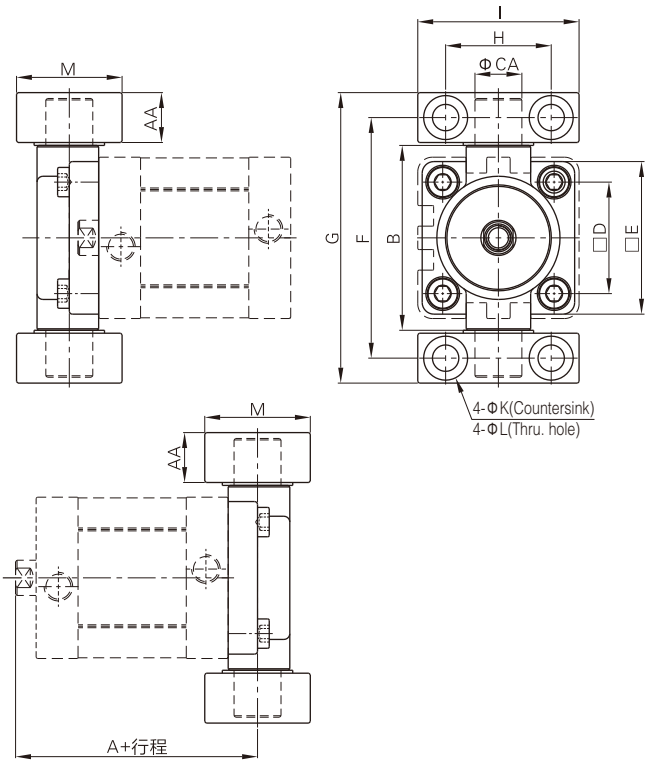

Bore size\Item	A	AA	B	CA	D	E	F	G	H	I	K	L	M
32	63	14	52	12	32.5	46	66	80	32	46	11	7	30
40	66.5	17	65	16	38	52	85	99	36	55	15	9	36
50	71.5	17	75	16	46.5	64	94	111	36	55	15	9	36
63	77	20.5	90	20	56.5	74	113.5	134	42	65	18	11	40
80	85	20.5	112	20	72	94	133.5	154	42	65	18	11	40
100	102	24.5	135	25	89	114	159.5	184	50	75	20	14	50
125	124	24.5	170	25	110	139	187.5	212	50	75	20	14	50

[Note] TCM2 cann't be used alone, it must be used with FTC.
The installation position of the accessories can not be adjusted arbitrarily.

I Knuckle F-ACQ12I

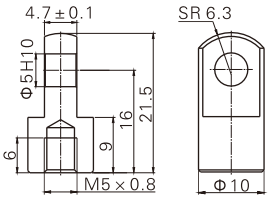

[Note] Other I knockles are common parts.

Y Knuckle F-ACQ12Y

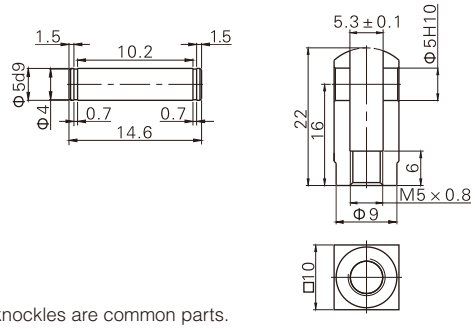

[Note] Other Y knockles are common parts.



Specifications

Bore size(mm)		20	25	32	40
Acting type	MSAL, MTAL	Single acting			
	Others	Double acting			
Fluid		Air(to be filtered by 40μm filter element)			
Operating pressure	Double acting	0.1~1.0MPa(15~145psi)(1.0~10.0bar)			
	Single acting	0.2~1.0MPa(28~145psi)(2.0~10.0bar)			
Proof pressure		1.5MPa(215psi)(15bar)			
Temperature ℃		-20~70			
Speed range mm/s		Double acting: 30~80 Single acting: 50~800			
Stroke tolerance		Stroke≤100 $^{+1.0}_{0}$ Stroke>100 $^{+1.5}_{0}$			
Cushion type		Bumper			
Port size [Note]		1/8"			1/4"

[Note] PT thread, G thread and NPT thread are available.

Symbol

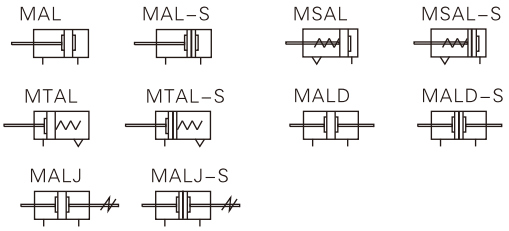

Stroke

Bore size (mm)		Standard stroke (mm)	Max. Std stroke	Max. stroke
MAL	20	10 15 20 25 30 40 50 60 75 80 100 125 150 160 175 200 250 300 350 400 450 500	500	1000
	25	10 15 20 25 30 40 50 60 75 80 100 125 150 160 175 200 250 300 350 400 450 500	500	1000
	32	10 15 20 25 30 40 50 60 75 80 100 125 150 160 175 200 250 300 350 400 450 500	500	1500
	40	10 15 20 25 30 40 50 60 75 80 100 125 150 160 175 200 250 300 350 400 450 500	500	1500
MALD MALJ	20	10 15 20 25 30 40 50 60 75 80 100 125 150 160 175 200 250 300	300	-
	25	10 15 20 25 30 40 50 60 75 80 100 125 150 160 175 200 250 300	300	-
	32	10 15 20 25 30 40 50 60 75 80 100 125 150 160 175 200 250 300 350 400 450 500	500	-
	40	10 15 20 25 30 40 50 60 75 80 100 125 150 160 175 200 250 300 350 400 450 500	500	-
MSAL	20	10 15 20 25 30 40 50 60 75 80 100 125 150	-	-
	25	10 15 20 25 30 40 50 60 75 80 100 125 150	-	-
	32	10 15 20 25 30 40 50 60 75 80 100 125 150	-	-
	40	10 15 20 25 30 40 50 60 75 80 100 125 150	-	-
MTAL	20	10 15 20 25 30 40 50 60 75 80 100	-	-
	25	10 15 20 25 30 40 50 60 75 80 100	-	-
	32	10 15 20 25 30 40 50 60 75 80 100	-	-
	40	10 15 20 25 30 40 50 60 75 80 100	-	-

Note) Consult us for non-standard stroke.

Product feature

1. Manufactured by out enterprise.
2. Front and back cover and cylinder tube are connected by threads.
3. Piston adopts hetergoeneous two-way seal structure. It has compact size.
4. Front cover adopts self-lubrication bearing guide that has good performance of lubrication and guide.
5. There are several modes of back cover, which makes the installation of cylinder more convenient.
6. There are cylinders and mounting accessories with several specifications for your choice.

Ordering code

MAL 20 × 50 S CM □ □
MALD 20 × 50 S □ □
MALJ 20 × 50 - 20 S □ □

Model

MAL	Mini cylinder(Double acting)
MSAL	Mini cylinder(Single acting_push)
MTAL	Mini cylinder(Single acting_pull)
MALD	Mini cylinder(Double rod)
MALJ	Mini cylinder(Adjustable stroke)

Bore size

20	20mm
25	25mm
32	32mm
40	40mm

Stroke

Refer to stroke table for details

Adjustable Stroke

MALJ	10: 10mm
	20: 20mm
	30: 30mm
	40: 40mm
	50: 50mm
	75: 75mm
	100: 100mm
Others	No this code

Magnet code

Blank	Without magnet
S	With magnet

Back cover

CA	CA: Pivot type
U	U: Flat-end type
CM	CM: Round-end type
Others	No this code

Mounting type

MAL MSAL MTAL	Blank: No accessories
	FA: FA type
	SDB: SDB type
	LB: LB type
MALD MALJ	Blank: No accessories
	FA: FA type
	LB: LB type

Thread type

Blank	PT
G	G
T	NPT

Inner structure and material of major parts

MAL-CA

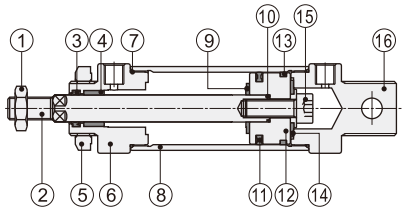

NO.	Item	Material	NO.	Item	Material
1	Rod nut	Carbon steel	9	Bumper	NBR
2	Piston rod	Carbon steel with 20μm chrome plated	10	O-ring	NBR
3	Front cover packing	NBR	11	Piston seal	NBR
4	Bushing	Wear resistant material	12	Piston	Aluminum alloy
5	Front cover nut	Carbon steel	13	Wear ring	Wear resistant material
6	Front cover	Aluminum alloy	14	Washer	Free cutting material
7	O-ring	NBR	15	Bolt	Carbon steel
8	Barrel	Aluminum alloy	16	Back cover	Aluminum alloy

Dimensions

MAL

CA Type

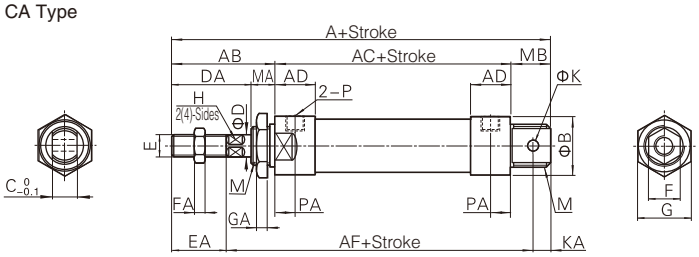

CM Type

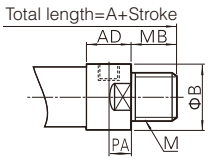

U Type

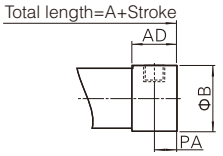

Bore size\Item	A			AB	AC	AD	AF	B	C	D	DA	E	EA	F	FA	G	GA	H	K	KA	M	MA	MB		P	PA
Back cover	CA	CM	U																				CA	CM		
20	131	122	110	40	70	16	102	29	16	8	28	M8×1.25	20	12	6	29	7	6	8	9	M22×1.5	12	21	12	1/8"	8
25	135	128	114	44	70	16	104	34	16	10	30	M10×1.25	22	17	6	29	7	8	8	9	M22×1.5	14	21	14	1/8"	8
32	141	128	114	44	70	16	107	39.5	16	12	30	M10×1.25	22	17	6	32	8	10	10	12	M24×2.0	14	27	14	1/8"	8
40	165	152	138	46	92	22	129	49.5	20	16	32	M12×1.25	24	17	7	41	9	14	12	12	M30×2.0	14	27	14	1/4"	11

Remark: The dimensions or magnet type cylinder are the same as non-magnet type cylinder.

MSAL

CA Type

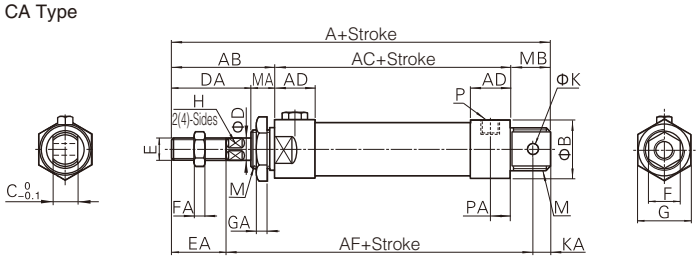

CM Type

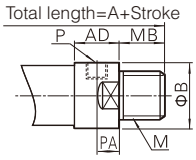

U Type

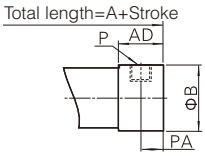

Item	A									AC ≥10-1			AF		
Back cover	CA			CM			U			–			–		
Bore size\Stroke	≤50	51~100	≥101	≤50	51~100	≥101	≤50	51~100	≥101	≤50	51~100	≥101	≤50	51~100	≥101
20	156	181	206	147	172	197	135	160	185	95	120	145	127	152	177
25	160	185	210	153	178	203	139	164	189	95	120	145	129	154	179
32	166	191	216	153	178	203	139	164	189	95	120	145	132	157	182
40	190	215	240	177	202	227	163	188	213	117	142	167	154	179	204

Bore size\Item	AB	AC	B	C	D	DA	E	EA	F	FA	G	GA	H	K	KA	M	MA	MB(CA)	MB(CM)	P	PA
20	40	16	29	16	8	28	M8×1.25	20	12	6	29	7	6	8	9	M22×1.5	12	21	12	1/8"	8
25	44	16	34	16	10	30	M10×1.25	22	17	6	29	7	8	8	9	M22×1.5	14	21	14	1/8"	8
32	44	16	39.5	16	12	30	M10×1.25	22	17	6	32	8	10	10	12	M24×2.0	14	27	14	1/8"	8
40	46	22	49.5	20	16	32	M12×1.25	24	17	7	41	9	14	12	12	M30×2.0	14	27	14	1/4"	11

Remark: The dimensions or magnet type cylinder are the same as non-magnet type cylinder.

MTAL

CA Type

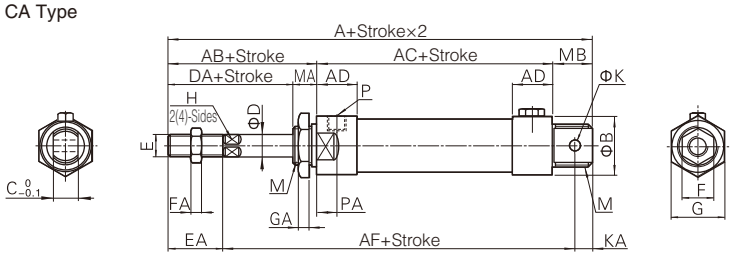

CM Type

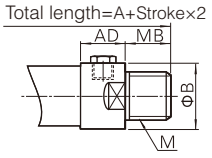

U Type

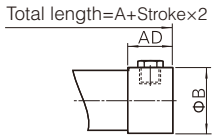

Item	A												AC				AF			
Back cover	CA				CM				U				–				–			
Bore size\Stroke	0~25	26~50	51~75	76~100	0~25	26~50	51~75	76~100	0~25	26~50	51~75	76~100	0~25	26~50	51~75	76~100	0~25	26~50	51~75	76~100
20	146	156	171	181	137	147	162	172	125	135	150	160	85	95	110	120	117	127	142	152
25	150	160	175	185	143	153	168	178	129	139	154	164	85	95	110	120	121	131	146	156
32	156	166	186	196	143	153	173	183	129	139	159	169	85	95	115	125	122	132	152	162
40	180	190	210	220	167	177	197	207	153	163	183	193	107	117	137	147	144	154	174	184

Bore size\Item	AB	AC	B	C	D	DA	E	EA	F	FA	G	GA	H	K	KA	M	MA	MB		P	PA
Back cover																		CA	CM		
20	40	16	29	16	8	28	M8×1.25	20	12	6	29	7	6	8	9	M22×1.5	12	21	12	1/8"	8
25	44	16	34	16	10	30	M10×1.25	22	17	6	29	7	8	8	9	M22×1.5	14	21	14	1/8"	8
32	44	16	39.5	16	12	30	M10×1.25	22	17	6	32	8	10	10	12	M24×2.0	14	27	14	1/8"	8
40	46	22	49.5	20	16	32	M12×1.25	24	17	7	41	9	14	12	12	M30×2.0	14	27	14	1/4"	11

Remark: The dimensions or magnet type cylinder are the same as non-magnet type cylinder.

MALD

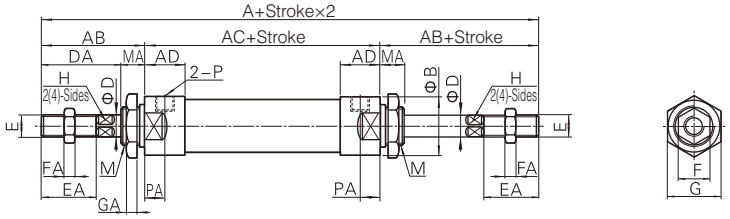

MALJ

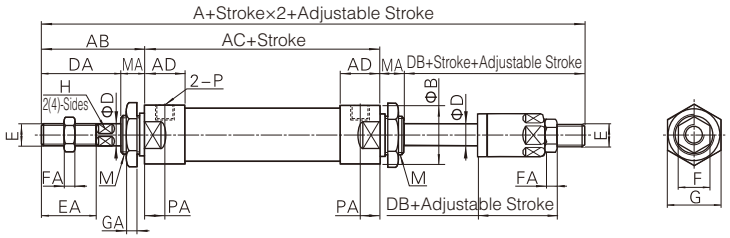

Bore size\Item	A		AB	AC	AD	B	D	DA	DB	E	EA	F	FA	G	GA	H	M	MA	P	PA
Model	MALD	MALJ																		
20	150	147	40	70	16	29	8	28	25	M8×1.25	20	12	6	29	7	6	M22×1.5	12	1/8"	8
25	158	155	44	70	16	34	10	30	27	M10×1.25	22	17	6	29	7	8	M22×1.5	14	1/8"	8
32	158	155	44	70	16	39.5	12	30	27	M10×1.25	22	17	6	32	8	10	M24×2.0	14	1/8"	8
40	184	180	46	92	22	49.5	16	32	28	M12×1.25	24	17	7	41	9	14	M30×2.0	14	1/4"	11

Remark: The dimensions or magnet type cylinder are the same as non-magnet type cylinder.

List for ordering code of accessories

Accessories	Mounting accessory			Knuckle				Sensor switch	
Bore size	LB	FA	SDB	I: I Knuckle	Y: Y Knuckle	F: F Knuckle	U: U Knuckle	CS1-M□	DS1-M□
20	F-MA20LB	F-MA20FA	F-MA20SDB	F-MA20I	F-MA20Y	F-M8×125F	F-M8×125U	CS1-M-A20	DS1-M-A20
25				F-MA25I	F-MA25Y	F-M10×125F	F-M10×125U	CS1-M-A25	DS1-M-A25
32	F-MA32LB	F-MA32FA	F-MA20SDB					CS1-M-A32	DS1-M-A32
40	F-MA40LB	F-MA40FA	F-MA20SDB	F-MA40I	F-MA40Y	F-M12×125F	F-M12×125U	CS1-M-A40	DS1-M-A40

Accessory selection

Accessories		Mounting accessory			Knuckle			Sensor switch		
Cylinder model		LB	FA	SDB	I	Y	U	F	CS1-M	DS1-M
MAL	Standard	●	●	●	●	●	●	●	×	×
	With magnet	●	●	●	●	●	●	●	●	●
MSAL MTAL	Standard	●	●	●	●	●	●	●	×	×
	With magnet	●	●	●	●	●	●	●	●	●
MALD MALJ	Standard	●	●	×	●	●	●	●	×	×
	With magnet	●	●	×	●	●	●	●	●	●

Material of accessories selection

Accessories	Mounting accessory			Knuckle			
Bore size	LB	FA	SDB	I	Y	F	U
20~40	○	○	□	□	□	□	□

○——Low carbon steel, □——Carbon steel

[Note] Floating joint (F) and fisheye joint (U) are common parts.

Dimensions

LB

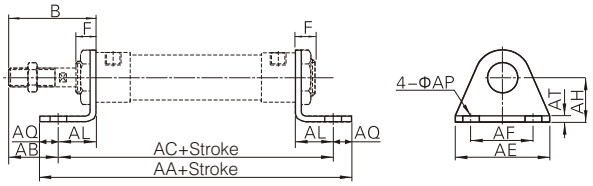

Bore size\Item	AA (MAL)	AA(MSAL)			AC (MAL)	AC(MSAL)		
Stroke		0~50	51~100	101~150		0~50	51~100	101~150
20	116	141	166	191	100	125	150	175
25	116	141	166	191	100	125	150	175
32	136	161	186	211	120	145	170	195
40	158	183	208	233	142	167	192	217

Bore size\Item	B	F	AB	AE	AF	AL	AQ	AP	AT	AH
20	40	12	25	54	40	15	8	6.5	3	25
25	44	14	29	54	40	15	8	6.5	3	25
32	44	14	19	59	45	25	8	7	3.5	32
40	46	14	21	64	50	25	8	7	3.5	36

FA

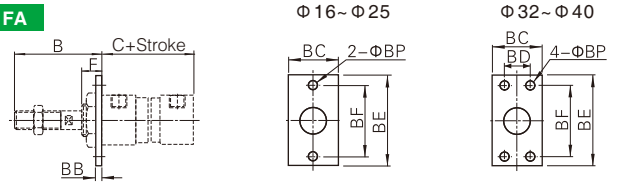

Bore size\Item	B	C (MAL)	C(MSAL)			BB	BC	BD	BE	BF	BP	F
Stroke			0~50	51~100	101~150							
20	40	70	95	120	145	4	38	-	64	50	6.5	12
25	44	70	95	120	145	4	38	-	64	50	6.5	14
32	44	70	95	120	145	4	47	33	72	58	6.5	14
40	46	92	117	142	167	4	50	36	84	70	6.5	14

SDB

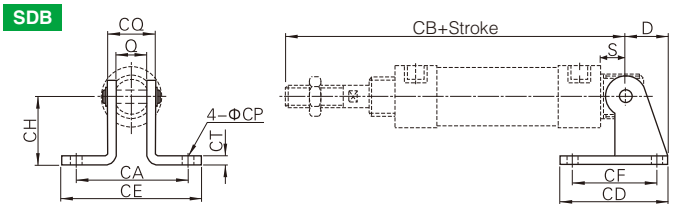

Bore size\Item	D	S	Q	CA	CB (MAL)	CB(MSAL)			CD	CE	CF	CH	CT	CP	CQ
Stroke						0~50	51~100	101~150							
20	21	12	16	51	122	147	172	197	48	67	32	32	2.5	7	22
25	21	12	16	51	126	151	176	201	48	67	32	32	2.5	7	22
32	27	15	16	51	129	154	179	204	52	67	36	36	3	7	24
40	27	15	20	55	153	178	203	228	56	71	40	40	3	7	28

Y Knuckle

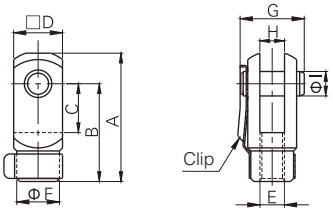

Type\Item	A	B	C	D	E	F	G	H	I
F-MA20Y	42	32	16	16	M8×1.25	14	21	8	8
F-MA25Y	52	40	20	19	M10×1.25	18	25	10	10

I Knuckle

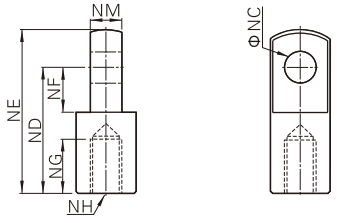

Type\Item	NC	ND	NE	NF	NG	NH	NM
F-MA20I	8	30	40	11	15	M8×1.25	8
F-MA25I	10	40	50	15	20	M10×1.25	10
F-MA40I	10	45	57	16	23	M12×1.25	14

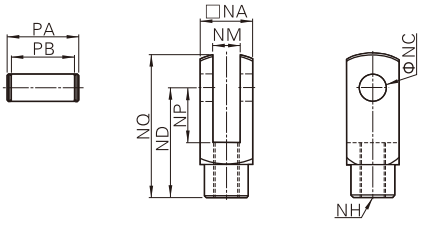

Type\Item	NA	NC	ND	NP	NQ	NM	NH	PA	PB
F-MA40Y	25.4	10	45	20	57	14	M12×1.25	32	26.2

Specifications

Bore size(mm)		16	20	25	32	40	50	63
Acting type	MSA/MTA	Single acting					-	
	MA/MAD/MAJ	Double acting					-	
	MAR	-	Double acting					
	MAC/MACD/MACJ	-	Double acting with cushion					
Fluid		Air(to be filtered by 40μm filter element)						
Operating pressure	Double acting	0.15~1.0MPa(22~145psi)(1.5~10.0bar)						
	Single acting	0.2~1.0MPa(28~145psi)(2.0~10.0bar)						
Proof pressure		1.5MPa(215psi)(15bar)						
Temperature ℃		-20~70						
Speed range mm/s		Double acting 30~800 Single acting 50~800						
Stroke tolerance		$0\sim150^{+1.0}_{0}$ $>150^{+1.0}_{0}$						
Cushion type		MAC/MACD/ MACJ Series: Variable cushion; Other series: Bumper						
Port size [Note]		M5×0.8	1/8"				1/4"	

[Note] PT thread, G thread and NPT thread are available.

Symbol

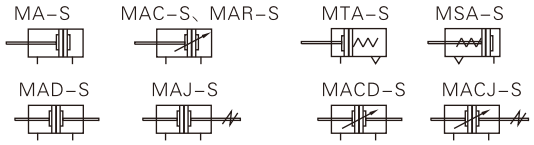

Stroke

Bore size (mm)		Standard stroke (mm)	Max. Std stroke	Max. stroke
MA	16	10 15 20 25 30 40 50 60 75 80 100 125 150 160 175 200 250 300 350 400 450 500	500	600
MA MAC MAR	20	10 15 20 25 30 40 50 60 75 80 100 125 150 160 175 200 250 300 350 400 450 500	500	800
	25	10 15 20 25 30 40 50 60 75 80 100 125 150 160 175 200 250 300 350 400 450 500	500	800
	32	10 15 20 25 30 40 50 60 75 80 100 125 150 160 175 200 250 300 350 400 450 500	500	800
	40	10 15 20 25 30 40 50 60 75 80 100 125 150 160 175 200 250 300 350 400 450 500	500	800
MAC MAR	50	10 15 20 25 30 40 50 60 75 80 100 125 150 160 175 200 250 300 350 400 450 500	500	800
	63	10 15 20 25 30 40 50 60 75 80 100 125 150 160 175 200 250 300 350 400 450 500	500	800
MAD\MAJ	16	10 15 20 25 30 40 50 60 75 80 100 125 150 160 175 200 250 300	300	-
MAD MAJ	20	10 15 20 25 30 40 50 60 75 80 100 125 150 160 175 200 250 300	300	-
	25	10 15 20 25 30 40 50 60 75 80 100 125 150 160 175 200 250 300	300	-
MACD MACJ	32	10 15 20 25 30 40 50 60 75 80 100 125 150 160 175 200 250 300 350 400 450 500	500	-
	40	10 15 20 25 30 40 50 60 75 80 100 125 150 160 175 200 250 300 350 400 450 500	500	-
MACD MACJ	50	10 15 20 25 30 40 50 60 75 80 100 125 150 160 175 200 250 300 350 400 450 500	500	-
	63	10 15 20 25 30 40 50 60 75 80 100 125 150 160 175 200 250 300 350 400 450 500	500	-
MSA	16	10 15 20 25 30 40 50 60 75 80 100	-	-
	20	10 15 20 25 30 40 50 60 75 80 100 125 150	-	-
	25	10 15 20 25 30 40 50 60 75 80 100 125 150	-	-
	32	10 15 20 25 30 40 50 60 75 80 100 125 150	-	-
	40	10 15 20 25 30 40 50 60 75 80 100 125 150	-	-
MTA	16	10 15 20 25 30 40 50 60 75 80 100	-	-
	20	10 15 20 25 30 40 50 60 75 80 100	-	-
	25	10 15 20 25 30 40 50 60 75 80 100	-	-
	32	10 15 20 25 30 40 50 60 75 80 100	-	-
	40	10 15 20 25 30 40 50 60 75 80 100	-	-

Note) Consult us for non-standard stroke.

Product feature

1. Standard cylinder manufactured by our enterprise.
2. Piston adopts heterogeneous two-way seal structure. It has compact size and has the function of grease reservation.
3. Front cover has fixed bumper which can reduce the impact of direction change of the cylinder.
4. There are several modes of back cover, which makes the installation of cylinder more convenient.
5. Front and back cover and stainless steel block adopt riveted rolling packed structure to form a reliable connection.
6. The cylinder body has stainless steel pipes with high precision to produce high strength and corrosion resistance.
7. There are cylinders and mounting accessories with several specifications for your choice.
8. All cylinders of this series have magnet.

Ordering code

MA MAD MAJ MAR	U	20 20 20 20	×	50 50 50 50	- 20	S S S S	CM	□ □ □	□ □ □ □			

Model

MA	Mini cylinder(Double acting)
MSA	Mini cylinder(Single acting_push)
MTA	Mini cylinder(Single acting_pull)
MAD	Mini cylinder(Double rod)
MAJ	Mini cylinder(Adjustable stroke)
MAR	Min cylinder(Double acting with cushion)
MAC	Min cylinder(Double acting with cushion)
MACD	Mini cylinder(Double rod with cushion)
MACJ	Mini cylinder(Adjustable stroke with cushion)

Front cover

MAR	F: Front mounting type
	U: Up mounting type
Others	No this code

Bore size

MA, MSA, MTA, MAD, MAJ	16 20 25 32 40
MAC, MAR, MACD, MACJ	20 25 32 40 50 63

Stroke

Refer to stroke table for details

Adjustable Stroke

MAJ MACJ	10: 10mm
	20: 20mm
	30: 30mm
	40: 40mm
	50: 50mm
	75: 75mm
	100: 100mm
Others	No this code

Magnet code

S	With magnet

Back cover

MA, MAC MSA MTA	CA: Pivot type
	U: Flat-end type
	CM: Round-end type
Others	No this code

Mounting type

MA MAC MSA MTA	Blank: No accessories
	FA: FA type
	SDB: SDB type
	LB: LB type
MAD MACD MAJ MACJ	Blank: No accessories
	FA: FA type
	LB: LB type
MAR	No this code

Thread type

Blank	PT
G	G
T	NPT

Inner structure and material of major parts

MA-CA

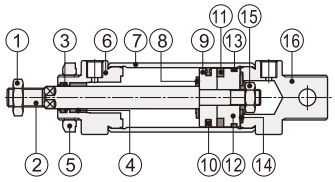

NO.	Item	Material	NO.	Item	Material
1	Rod nut	Carbon steel	9	Piston	Aluminum alloy
2	Piston rod	Carbon steel with 20μm chrome plated	10	Piston seal	NBR
3	Front cover packing	NBR	11	Magnet	Plastic
4	Bushing	Wear resistant material	12	Magnet holder	Aluminum alloy
5	Front cover nut	Carbon steel	13	Wear ring	Wear resistant material
6	Front cover	Aluminum alloy	14	Washer	Free cutting material
7	Barrel	Stainless steel	15	Nut	Carbon steel
8	Bumper	NBR	16	Back cover	Aluminum alloy

Dimensions

MA Φ16~Φ40

MAC Φ20~Φ40

CA Type

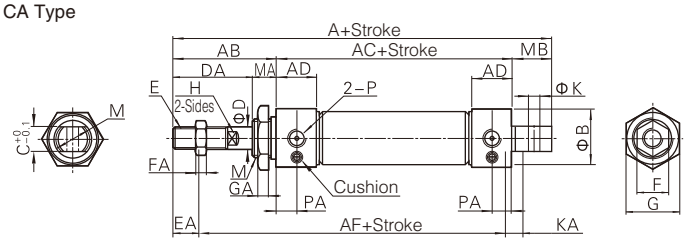

CM Type

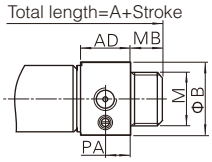

U Type

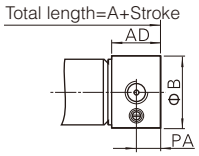

Bore size\Item	A			AB	AC	AD	AF	B	C	D	DA	E	EA	F	FA	G	GA	H	K	KA	M	MA	MB		P	PA
Back cover	CA	CM	U																				CA	CM		
16	114	114	98	38	60	10	91	21	12	6	22	M6×1.0	16	10	5	22	6	5	6	7	M16×1.5	16	16	16	M5×0.8	5
20	137	128	116	40	76	16	108	27	16	8	28	M8×1.25	20	12	6	29	7	6	8	9	M22×1.5	12	21	12	1/8"	8
25	141	134	120	44	76	16	110	30	16	10	30	M10×1.25	22	17	6	29	7	8	8	9	M22×1.5	14	21	14	1/8"	8
32	147	134	120	44	76	16	113	35	16	12	30	M10×1.25	22	17	6	32	8	10	10	12	M24×2.0	14	27	14	1/8"	8
40	149	136	122	46	76	16.5	113	41.5	20	16	32	M12×1.25	24	17	7	41	9	14	12	12	M30×2.0	14	27	14	1/8"	8

MAC Φ50\Φ63

CA Type

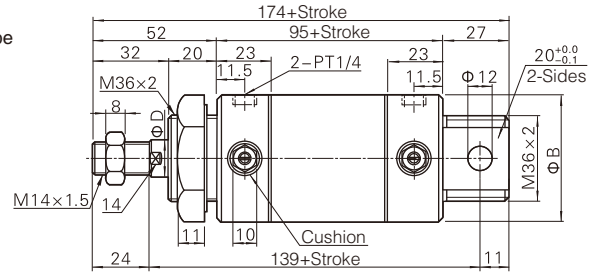

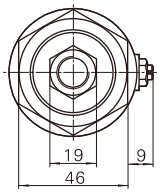

CM Type

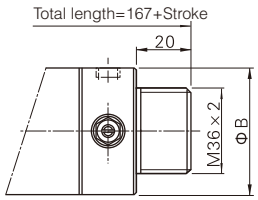

U Type

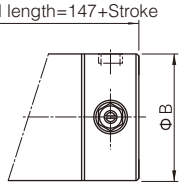

Bore size\Item	B	D
50	53	16
63	67	16

MSA Φ16~Φ40

CA Type

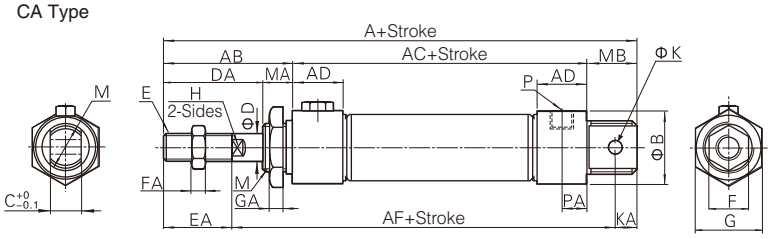

CM Type

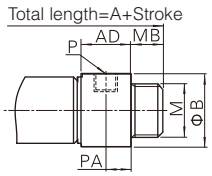

U Type

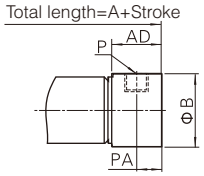

Item	A									AB	AC			AD	AF		
Back cover	CA			CM			U			–	–			–	–		
Bore size\Stroke	≤50	51~100	≤101	≤50	51~100	≤101	≤50	51~100	≤101	–	≤50	51~100	≤101	–	≤50	51~100	≤101
16	139	164	-	139	164	-	123	148	-	38	85	110	-	10	116	141	-
20	162	187	212	153	178	203	141	166	191	40	101	126	151	16	133	158	183
25	166	191	216	159	184	209	145	170	195	44	101	126	151	16	135	160	185
32	172	197	222	159	184	209	145	170	195	44	101	126	151	16	138	163	188
40	174	199	224	161	186	211	147	172	197	46	101	126	151	16.5	138	163	188

Bore size\Item	B	C	D	DA	E	EA	F	FA	G	GA	H	K	KA	M	MA	MB		P	PA
Back cover																CA	CM		
16	21	12	6	22	M6×1.0	16	10	5	22	6	5	6	7	M16×1.5	16	16	16	M5×0.8	5
20	27	16	8	28	M8×1.25	20	12	6	29	7	6	8	9	M22×1.5	12	21	12	PT1/8	8
25	30	16	10	30	M10×1.25	22	17	6	29	7	8	8	9	M22×1.5	14	21	14	PT1/8	8
32	35	16	12	30	M10×1.25	22	17	6	32	8	10	10	12	M24×2.0	14	27	14	PT1/8	8
40	41.5	20	16	32	M12×1.25	24	17	7	41	9	14	12	12	M30×2.0	14	27	14	PT1/8	8

MTA Φ16~Φ40

CA Type

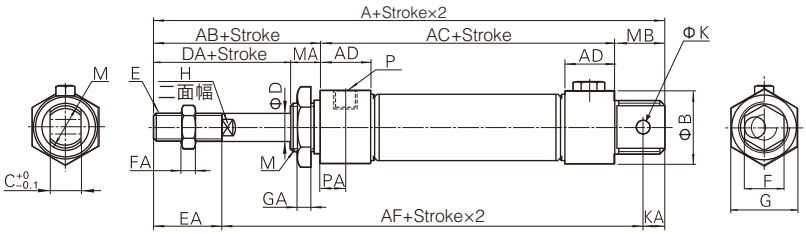

CMType

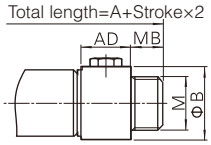

CMType

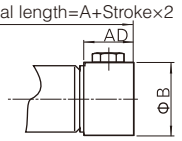

Item	A												AC				AF			
Back cover	CA				CM				U				–				–			
Bore size\Stroke	≤25	≤50	≤75	≤100	≤25	≤50	≤75	≤100	≤25	≤50	≤75	≤100	≤25	≤50	≤75	≤100	≤25	≤50	≤75	≤100
16	129	139	154	164	129	139	154	164	113	123	138	148	75	85	100	110	106	116	131	141
20	152	162	177	187	143	153	168	178	131	141	156	166	91	101	116	126	123	133	148	158
25	156	166	181	191	149	159	174	184	135	145	160	170	91	101	116	126	125	135	150	160
32	162	172	192	202	149	159	179	189	135	145	165	175	91	101	121	131	128	138	158	168
40	164	174	194	204	151	161	181	191	137	147	167	177	91	101	121	131	128	138	158	168

Bore size\Item	AB	AC	B	C	D	DA	E	EA	F	FA	G	GA	H	K	KA	M	MA	MB		P	PA
Back cover																		CA	CM		
16	38	10	21	12	6	22	M6×1.0	16	10	5	22	6	5	6	7	M16×1.5	16	16	16	M5×0.8	5
20	40	16	27	16	8	28	M8×1.25	20	12	6	29	7	6	8	9	M22×1.5	12	21	12	1/8"	8
25	44	16	30	16	10	30	M10×1.25	22	17	6	29	7	8	8	9	M22×1.5	14	21	14	1/8"	8
32	44	16	35	16	12	30	M10×1.25	22	17	6	32	8	10	10	12	M24×2.0	14	27	14	1/8"	8
40	46	16.5	41.5	20	16	32	M12×1.25	24	17	7	41	9	14	12	12	M30×2.0	14	27	14	1/8"	8

MAD/MACD

Φ16~Φ40

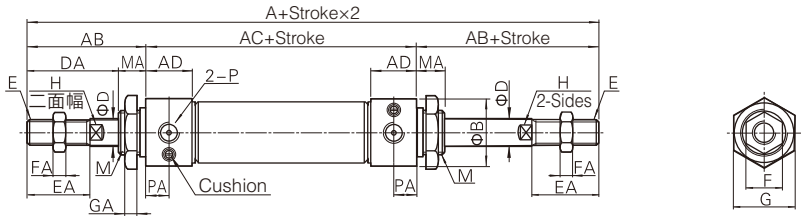

Φ50/Φ63

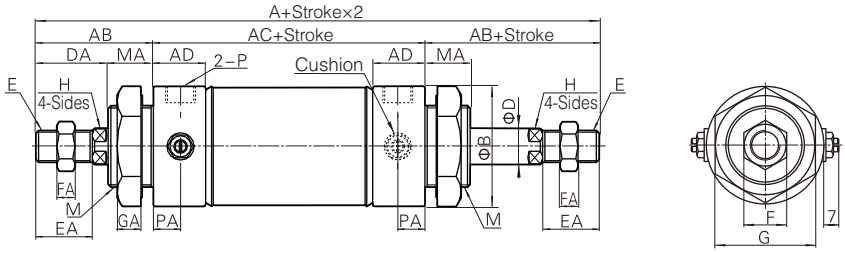

Bore size\Item	A	AB	AC	AD	B	D	DA	E	EA	F	FA	G	GA	H	M	MA	P	PA
16	136	38	60	10	21	6	22	M6×1.0	16	10	5	22	6	5	M16×1.5	16	M5×0.8	5
20	156	40	76	16	27	8	28	M8×1.25	20	12	6	29	7	6	M22×1.5	12	1/8"	8
25	164	44	76	16	30	10	30	M10×1.25	22	17	6	29	7	8	M22×1.5	14	1/8"	8
32	164	44	76	16	35	12	30	M10×1.25	22	17	6	32	8	10	M24×2.0	14	1/8"	8
40	168	46	76	16.5	41.5	16	32	M12×1.25	24	17	7	41	9	14	M30×2.0	14	1/8"	8
50	199	52	95	23	53	16	32	M14×1.5	24	19	8	46	11	14	M36×2.0	20	1/4"	11.5
63	199	52	95	23	67	16	32	M14×1.5	24	19	8	46	11	14	M36×2.0	20	1/4"	11.5

MAJ/MACJ

Φ16~Φ40

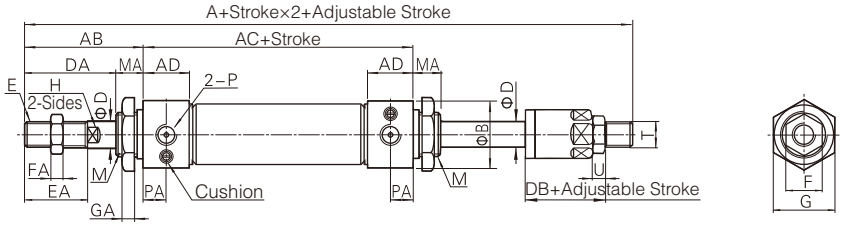

Φ50/Φ63

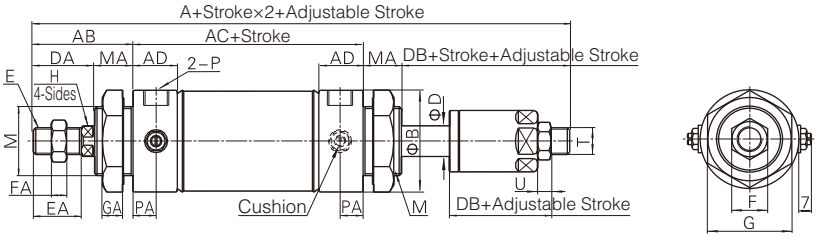

Bore size\Item	A	AB	AC	AD	B	D	DA	DB	E	EA	F	FA	H	M	MA	P	PA	G	GA	T	U
16	135	38	60	10	21	6	22	21	M6×1.0	16	10	5	5	M16×1.5	16	M5×0.8	5	22	6	M6×1.0	5
20	153	40	76	16	27	8	28	25	M8×1.25	20	12	6	6	M22×1.5	12	1/8"	8	29	7	M8×1.25	6
25	161	44	76	16	30	10	30	27	M10×1.25	22	17	6	8	M22×1.5	14	1/8"	8	29	7	M10×1.25	6
32	161	44	76	16	35	12	30	27	M10×1.25	22	17	6	10	M24×2.0	14	1/8"	8	32	8	M10×1.25	6
40	164	46	76	16.5	41.5	16	32	28	M12×1.25	24	17	7	14	M30×2.0	14	1/8"	8	41	9	M12×1.25	7
50	195	52	95	23	53	16	32	28	M14×1.5	24	19	8	14	M36×2.0	20	1/4"	11.5	46	11	M12×1.5	7
63	195	52	95	23	67	16	32	28	M14×1.5	24	19	8	14	M36×2.0	20	1/4"	11.5	46	11	M12×1.5	7

MARU(Up mounting type)

Φ20~Φ40

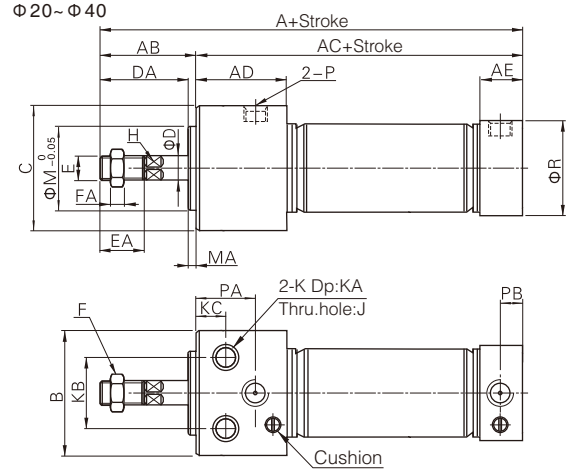

Bore size\Item	A	AB	AC	AD	AE	B	C	D	DA	E	EA	F	FA
20	120	31	89	29	16	33.5	30.5	8	28	M8×1.25	20	13	5
25	122	33	89	29	16	39	36.5	10	30	M10×1.25	22	17	6
32	122	33	89	29	16	47	42.5	12	30	M10×1.25	22	17	6
40	132.5	35	97.5	37.5	16.5	58.5	52.5	16	32	M14×1.5	24	19	8

Bore size\Item	H	J	K	KA	KB	KC	M	MA	P	PA	PB	R
20	6	Φ5.5	Φ9.5	6.5	21	12	20	3	1/8'	22	8	27
25	8	Φ6.5	Φ11.5	7.5	25	12	26	3	1/8"	22	8	30
32	10	Φ9.0	Φ14.0	10	30	12	26	3	1/8"	22	8	35
40	14	Φ11	Φ17.5	12.5	38	15	32	3	1/8"	27	8	41.5

Φ50/Φ63

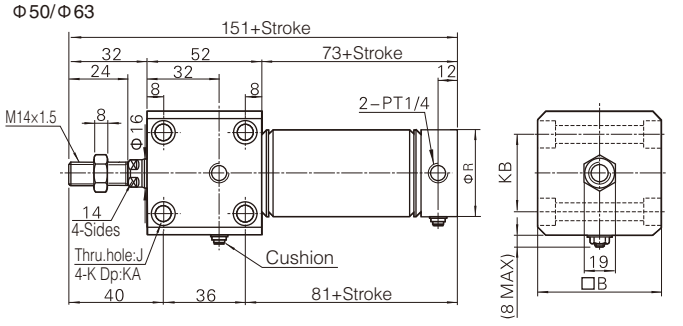

Bore size\Item	B	J	K	KA	KB	R
50	62	Φ6.5	2-Sides: Φ11.0	6.5	44	53
63	74	Φ9.0	2-Sides: Φ14.0	8.5	48	67

MARF(Up mounting type)

Φ20~Φ40

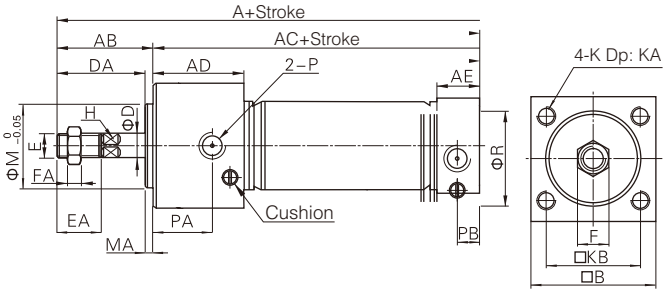

Bore size\Item	A	AB	AC	AD	AE	B	D	DA	E	EA
20	120	31	89	29	16	30.5	8	28	M8×1.25	20
25	122	33	89	29	16	36.5	10	30	M10×1.25	22
32	122	33	89	29	16	42.5	12	30	M10×1.25	22
40	132.5	35	97.5	37.5	16.5	52.5	16	32	M14×1.5	24

Bore size\Item	F	FA	H	K	KA	KB	M	MA	P	PA	PB	R
20	13	5	6	M5×0.8	9	22	20	3	1/8"	22	8	27
25	17	6	8	M6×1.0	10	26	26	3	1/8"	22	8	30
32	17	6	10	M6×1.0	11	30	26	3	1/8"	22	8	35
40	19	8	14	M8×1.25	14	36	32	3	1/8"	27	8	41.5

Φ50/Φ63

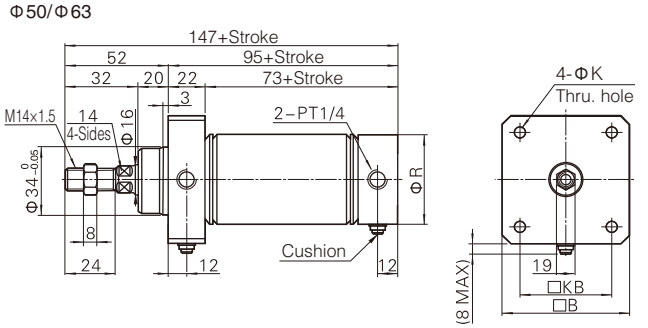

Bore size\Item	B	K	KB	R
50	62	6.5	44	53
63	74	9.0	48	67

List for ordering code of accessories

Accessories	Mounting accessory			Knuckle				Sensor switch					
Bore size	LB	FA	SDB	I: I Knuckle	Y: Y Knuckle	F: F Knuckle	U: U Knuckle	CS1-M□	DS1-M□	CS1-F	DS1-F	CS1-U	DS1-U
16	F-MA16LB	F-MA16FA	F-MA16SDB	F-MA16I	F-MA16Y	F-M6×100F	F-M6×100U	CS1-M-S16	DS1-M-S16	–	–	–	–
20	F-MA20LB	F-MA20FA	F-MA20SDB	F-MA20I	F-MA20Y	F-M8×125F	F-M8×125U	CS1-M-S20	DS1-M-S20				
25				F-MA25I	F-MA25Y	F-M10×125F	F-M10×125U	CS1-M-S25	DS1-M-S25				
32	F-MA32LB	F-MA32FA	F-MA32SDB					CS1-M-S32	DS1-M-S32				
40	F-MA40LB	F-MA40FA	F-MA40SDB	F-MA40I	F-MA40Y	F-M12×125F	F-M12×125U	CS1-M-S40	DS1-M-S40				
50	F-MA50LB	F-MA50FA		F-MA50I	F-MA50Y	F-M14×150F	F-M14×150U	CS1-M-S50	DS1-M-S50	CS1-F	DS1-F	CS1-U	DS1-U
63	F-MA63LB							CS1-M-S63	DS1-M-S63				

Accessory selection

Accessories	Mounting accessory			Knuckle				Sensor switch					
Cylinder model	LB	FA	SDB	I	Y	U	F	CS1-M	DS1-M	CS1-F	DS1-F	CS1-U	DS1-U
MA\MAC	●	●	●	●	●	●	●	●	●	●	●	●	●
MSA\MTA	●	●	●	●	●	●	●	●	●	●	●	●	●
MAD\MACD	●	●	×	●	●	●	●	●	●	●	●	●	●
MAJ\MACJ	●	●	×	●	●	●	●	●	●	●	●	●	●
MARF\MARU	×	×	×	●	●	●	●	●	●	●	●	●	●

Material of accessories selection

Accessories	Mounting accessory			Knuckle			
Bore size	LB	FA	SDB	I	Y	F	U
16~63	○	○	○	□	□	□	□

○——Low carbon steel, □——Carbon steel

[Note] Floating joint (F) and fisheye joint (U) are common parts.

Dimensions

LB

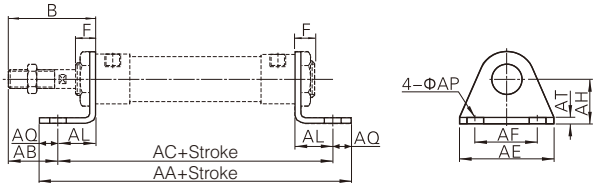

Bore size\Item	AA	AA(MSA)			AC	AC(MSA)		
Stroke	(MA\MAC)	0~50	51~100	101~150	(MA\MAC)	0~50	51~100	101~150
16	98	123	148	-	86	111	136	-
20	122	147	172	197	106	131	156	181
25	122	147	172	197	106	131	156	181
32	142	167	192	217	126	151	176	201
40	142	167	192	217	126	151	176	201
50	175	-	-	-	151	-	-	-
63	183	-	-	-	157	-	-	-

Bore size\Item	B	F	AB	AE	AF	AL	AQ	AP	AT	AH
16	38	16	25	44	32	13	6	5.5	2.5	20
20	40	12	25	54	40	15	8	6.5	3	25
25	44	14	29	54	40	15	8	6.5	3	25
32	44	14	19	59	45	25	8	7	3.5	32
40	46	14	21	64	50	25	8	7	3.5	36
50	52	20	24	86	66	28	12	11	4.5	40
63	52	20	21	106	82	31	13	11	4.5	45

FA

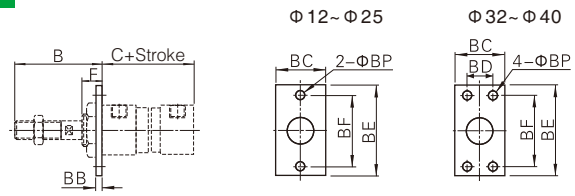

Bore size\Item	B	C	C(MSA)			BB	BC	BD	BE	BF	BP	F
Stroke		(MA/MAC)	0~50	51~100	101~150							
16	38	60	85	110	-	3	26	-	52	40	5.5	16
20	40	76	101	126	151	3.5	38	-	64	50	7	12
25	44	76	101	126	151	3.5	38	-	64	50	7	14
32	44	76	101	126	151	4	47	33	72	58	6.5	14
40	46	76	101	126	151	4	50	36	84	70	6.5	14
50	54	147				4.5	65	47	104	86	9	22
63	54	147				4.5	65	47	104	86	9	22

SDB

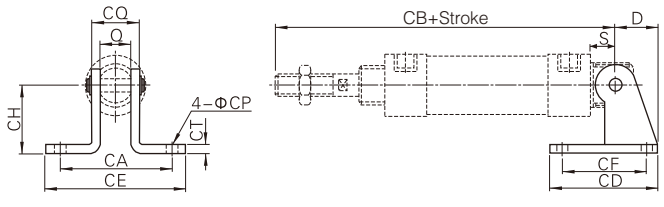

Bore size\Item	D	S	Q	CA	CB	CB(MSA)			CD	CE	CF	CH	CT	CP	CQ
Stroke					(MA)	0~50	51~100	101~150							
16	16	9	12	-	107	132	157	-	23	-	12	20	2	5.5	16
20	21	12	16	51	128	153	178	203	48	67	32	32	2.5	7	22
25	21	12	16	51	132	157	182	207	48	67	32	32	2.5	7	22
32	27	15	16	51	135	160	185	210	52	67	36	36	3	7	24
40	27	15	20	55	137	162	187	212	56	71	40	40	3	7	28

[Note] SDB is attached with relevant PIN.

I Knuckle

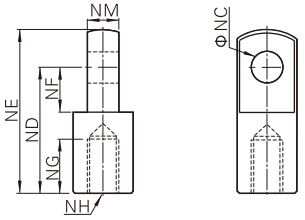

Type\Item	NC	ND	NE	NF	NG	NH	NM
F-MA16I	5	21	28	8.5	8	M6×1.0	6
F-MA20I	8	30	40	11	15	M8×1.0	8
F-MA25I	10	40	50	15	20	M10×1.0	10
F-MA40I	10	45	57	16	23	M12×1.0	14

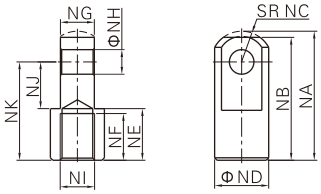

Type\Item	NA	NB	NC	ND	NE	NF	NG	NH	NJ	NK	NI
F-MAC50I	52.5	50	12.5	22	21	19	13.8	10	19	40	M14×1.5

Y Knuckle

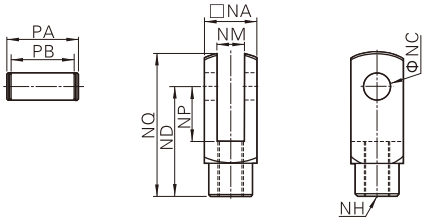

Type\Item	NA	NC	ND	NP	NQ	NM	NH	PA	PB
F-MA16Y	12	5	21	8.5	27.4	6	M6×1.0	16.8	12.4
F-MA40Y	25.4	10	45	20	57	14	M12×1.25	32	26.2

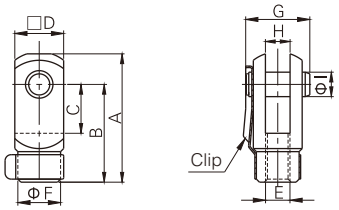

Type\Item	A	B	C	D	E	F	G	H	I
F-MA20Y	42	32	16	16	M8×1.25	14	21	8	8
F-MA25Y	52	40	20	19	M10×1.25	18	25	10	10

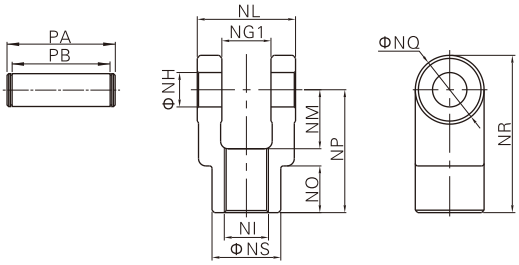

Type\Item	NG1	NH	NI	NL	NM	NO	NP	NQ	NR	NS	PA	PB
F-MAC50Y	14.2	10	M14×1.5	27.8	19	17	40	22	51	22	34.6	28.8



Specifications

Bore size(mm)		8	10	12	16	20	25	32	40
Acting type		Double acting, Single acting_Push, Single acting_Pull							
		Double acting with cushion							
Fluid		Air(to be filtered by 40μm filter element)							
Operating pressure	Double acting	0.15~1.0MPa(22~145psi)(1.5~10.0bar)							
	Single acting	0.2~1.0MPa(28~145psi)(2.0~10.0bar)							
Proof pressure		1.5MPa(215psi)(15bar)							
Temperature ℃		-20~70							
Speed range mm/s		Double acting: 30~800 Single acting: 50~800							
Stroke tolerance		$0\sim150^{+1.0}_{0}$ $>150^{+1.5}_{0}$							
Cushion type		MIC Series: Variable cushion Other series: Bumper							
Port size [Note]		M5×0.8				1/8"		1/4"	

[Note] PT thread, G thread and NPT thread are available.

Symbol

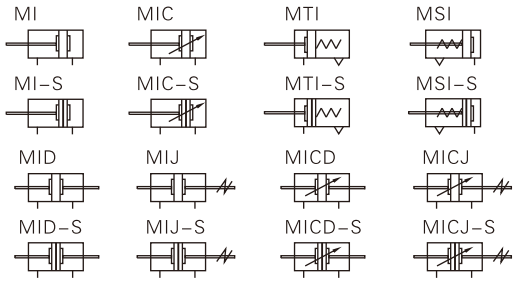

Product feature

1. Inaccordance with ISO6432 standard (Φ8~Φ25).
2. Front and back cover owns fixed bumper and which can reduce the impact of direction-change of the cylinder.
3. There are seveval mode of back cover, which makes the installtion of cylinder more convenient.
4. Front and back cover and stainless steel block adopt riveted rolling packed structure to form a reliable connection.
5. Piston rod and cylinder body with the material of stainless steel make the cylinder adapt general working environment with corrosivity.
6. There are cylinders and accessories with several specifications for installation for your choise.

Stroke

Bore size(mm)		Standard stroke (mm)	Max. Std stroke	Max. stroke
MI	8	10 15 20 25 30 40 50 60 75 80 100 125 150	150	200
	10	10 15 20 25 30 40 50 60 75 80 100 125 150 160 175 200	200	200
	12	10 15 20 25 30 40 50 60 75 80 100 125 150 160 175 200 250	250	500
MI MIC	16	10 15 20 25 30 40 50 60 75 80 100 125 150 160 175 200 250 300 350 400 450 500	500	600
	20\25\32\40		500	800
MID MIJ	8	10 15 20 25 30 40 50 60 75 80 100	100	-
	10	10 15 20 25 30 40 50 60 75 80 100	100	-
	12	10 15 20 25 30 40 50 60 75 80 100 125 150 160 175 200	200	-
MID MIJ MICD MICJ	16\20	10 15 20 25 30 40 50 60 75 80 100 125 150 160 175 200 250 300	300	-
	25	10 15 20 25 30 40 50 60 75 80 100 125 150 160 175 200 250 300	300	-
	32	10 15 20 25 30 40 50 60 75 80 100 125 150 160 175 200 250 300 350 400 450 500	500	-
	40		500	-
MSI MTI	8\10\12	10 15 20 25 30 40 50	-	-
	16	10 15 20 25 30 40 50 60 75 80 100	-	-
	20\25\32\40	10 15 20 25 30 40 50 60 75 80 100 125 150	-	-

Note) Consult us for non-standard stroke.

Ordering code

MI / MID / MIJ **10 × 40** **- 30** **S** **CA** □ □

Model

MI	Mini cylinder(Double acting)
MIC	Mini cylinder(Double acting with cushion)
MSI	Mini cylinder(Single acting_push)
MTI	Mini cylinder(Single acting_push)
MID	Mini cylinder(Double rod)
MICD	Mini cylinder(Double rod with cushion)
MIJ	Mini cylinder(Adjustable stroke)
MICJ	Mini cylinder(Adjustable stroke with cushion)

Bore size

MIC, MICD, MICJ	16 20 25 32 40
Others	8 10 12 16 20 25 32 40

Stroke

Refer to stroke table for details

Adjustable Stroke

MIJ MICJ	10: 10mm
	20: 20mm
	30: 30mm
	40: 40mm
	50: 50mm
	75: 75mm
	100: 100mm
Others	No this code

Magnet code

Blank	Without magnet
S	With magnet

Mounting type

MI MIC MSI MTI	Blank: No accessories
	FA: FA type
	SDB: SDB type
	LB: LB type
	TC: TC type
MID MICD MIJ MICJ	Blank: No accessories
	FA: FA type
	LB: LB type
	TC: TC type

Back cover

MI MSI MTI	CA: Pivot type	Φ8~Φ25
	U: Perpendicular 90°	Φ8~Φ40
	R: Axial air-in	Φ16~Φ40
	CM: Round-end type	Φ16~Φ40
MIC	CA: Pivot type	Φ16~Φ25
	U: Perpendicular	Φ16~Φ40
	CM: Round-end type	Φ16~Φ40
Others	No this code	

Thread type

Blank	PT
G	G

Inner structure and material of major parts

MI-CA

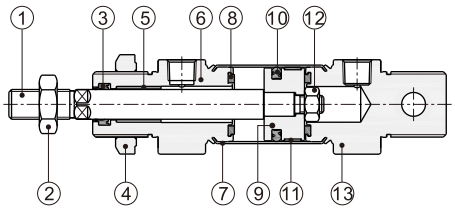

NO.	Item	Material
1	Rod	SUS 304
2	Rod nut	Carbon steel
3	Front cover packing	NBR
4	Front cover nut	Carbon steel
5	Bushing	Wear resistant material
6	Front cover	Aluminum alloy
7	Barrel	SUS304(Φ8~Φ12)\SUS316L(Others)
8	Bumper	TPU
9	Piston	SUS304(Φ8~Φ12)\Aluminum alloy(Others)
10	Piston seal	NBR
11	Wear ring	Wear resistant material
12	Nut	Carbon steel
13	Back cover	Aluminum alloy

Dimensions

MI

CA Type

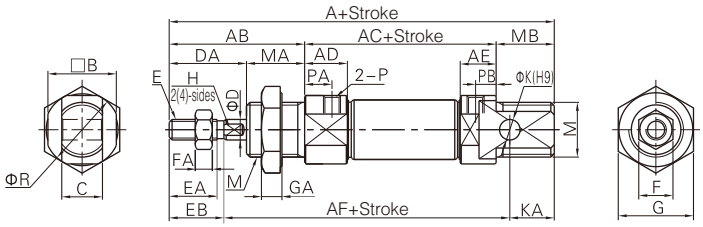

U Type

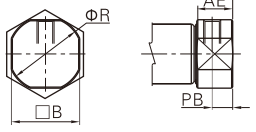

R Type

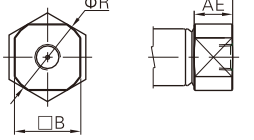

CM Type

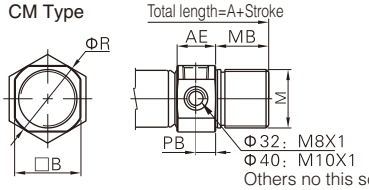

Bore size\Item	A				AB	AC	AD	AE		AF	B	C	D	DA	E	EA	EB	F	FA	G	GA	H	K	KA	M	MA	MB	P	PA	PB		R
Back cover	CA	U	R	CM				CA	UR/CM																					CA	U/CM	
8	86	74	-	-	28	46	11.5	9.5	9.5	64	15	8	4	16	M4×0.7	10.5	12	7	2.2	17	6	-	4	10	M12×1.25	12	12	M5×0.8	7	5	5	17
10	86	74	-	-	28	46	11.5	9.5	9.5	64	15	8	4	16	M4×0.7	10.5	12	7	2.2	17	6	-	4	10	M12×1.25	12	12	M5×0.8	7	5	5	17
12	105	88	-	-	38	50	12.5	10.5	10.5	75	18	12	6	21	M6×1.0	14	16	10	5	22	6	5(2-Sides)	6	14	M16×1.5	17	17	M5×0.8	8	6	6	20
16	111	94	94	111	38	56	12.5	10.5	10.5	82	20	12	6	21	M6×1.0	14.5	16	10	5	22	6	5(2-Sides)	6	13	M16×1.5	17	17	M5×0.8	8	6	6	22
20	126	106	106	126	44	62	14.5	14.5	14.5	95	25	16	8	24	M8×1.25	18	20	12	6	29	7	6(2-Sides)	8	11	M22×1.5	20	20	1/8"	7.5	7.5	7.5	29
25	137	114.5	115	137	50	65	16	16	16	104	30	16	10	28	M10×1.25	20.5	22	17	6	29	7	8(4-Sides)	8	11	M22×1.5	22	22	1/8"	8	8	8	33.5
32	-	125	126	140	58	-	16.5	-	16.5	-	34.5	-	12	28	M10×1.25	17.5	20	17	6	36	7	10(4-Sides)	-	-	M30×1.5	30	14	1/8"	9	-	9	37.5
40	-	158	158	174	69	-	22	-	22	-	42.5	-	16	34	M12×1.25	21	24	17	7	46	8	14(4-Sides)	-	-	M38×1.5	35	16	1/4"	12	-	12	46.5

Remark: The dimensions of magnet type cylinder are the same as non-magnet type cylinder.

MI Φ16~Φ25

CA Type

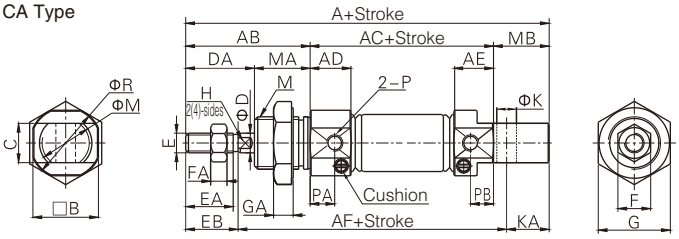

U Type

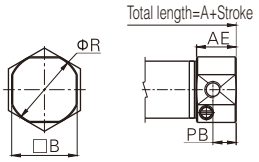

CM Type

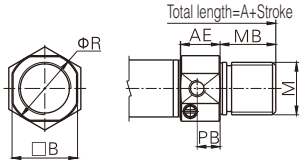

Bore size\Item	A		AB	AC	AD	AE		AF	B	C	D	DA	E	EA	EB	F	FA	G	GA	H	K	KA	M	MA	MB	P	PA	PB	R
Back cover	CA/CM	U				CA/CM	U																						
16	111	94	38	56	12.5	12	12	82	20	12	6	21	M6×1.0	14.5	16	10	5	22	6	5(2-Sides)	6	13	M16×1.5	17	17	M5×1.5	7.5	7	22
20	126	106	44	62	14.5	14.5	14.5	95	25	16	8	24	M8×1.25	18	20	12	6	29	7	6(2-Sides)	8	11	M22×1.5	20	20	1/8"	7.5	7.5	29
25	137	113.5	50	65	16	16	14.5	104	30	16	10	28	M10×1.25	20.5	22	17	6	29	7	8(4-Sides)	8	11	M22×1.5	22	22	1/8"	8	8	33.5

Remark: The dimensions of magnet type cylinder are the same as non-magnet type cylinder.

MIC Φ32/Φ40

CM Type

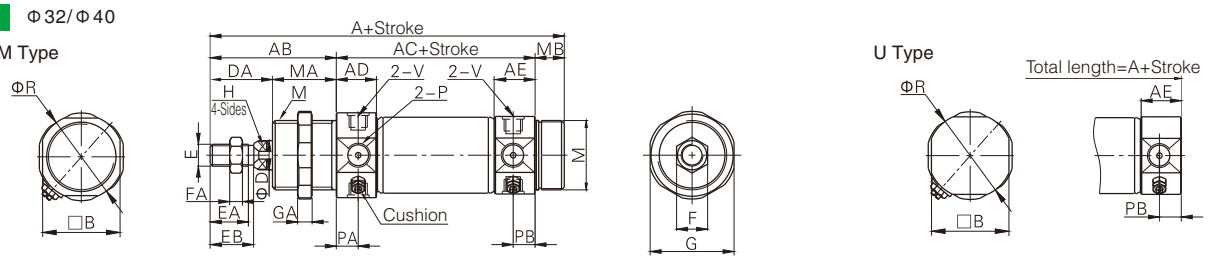

Bore size\Item	A		AB	AC	AD	AE		B	D	DA	E	EA	EB	F	FA	G	GA	H	M	MA	MB	P	PA	PB		R	V
Back cover	U	CM				U	CM																	U	CM		
32	124	140	58	68	16.5	14.5	16.5	34.5	12	28	M10×1.25	17.5	20	17	6	36	7	10(4-Sides)	M30×1.5	30	14	1/8"	9	7.5	9	37.5	M8×1
40	157.5	174	69	89	22	21.5	22	42.5	16	32	M12×1.25	21	24	17	7	46	8	24(4-Sides)	M38×1.5	35	16	1/4"	12	11.5	12	46.5	M10×1

Remark: The dimensions of magnet type cylinder are the same as non-magnet type cylinder.

MSI

CA Type

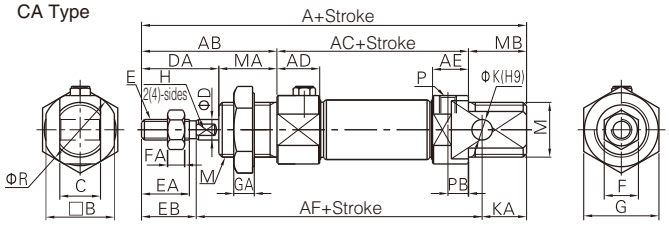

U Type

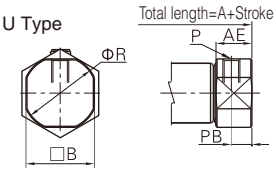

R Type

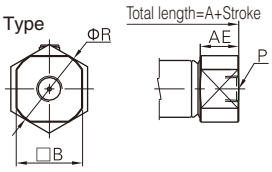

CM Type

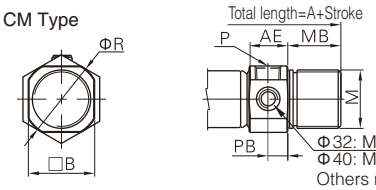

MTI

CA Type

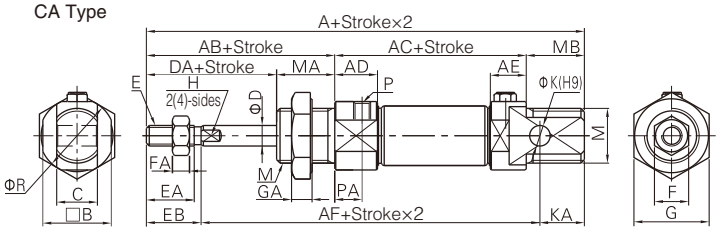

U Type

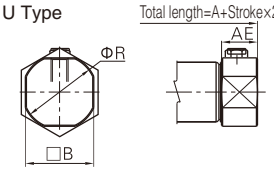

R Type

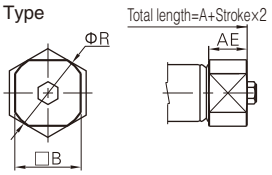

CM Type

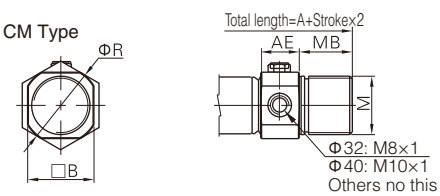

Item	A												AB	AC			AD	AF		
Back cover	CA			U			R			CM			-	–			-	–		
Bore size\Stroke	0~50	50~100	101~150	0~50	50~100	101~150	0~50	50~100	101~150	0~50	50~100	101~150	-	0~50	50~100	101~150	-	0~50	50~100	101~150
8	111	-	-	99	-	-	-	-	-	-	-	-	28	71	-	-	11.5	89	-	-
10	111	-	-	99	-	-	-	-	-	-	-	-	28	71	-	-	11.5	89	-	-
12	130	-	-	113	-	-	-	-	-	-	-	-	38	75	-	-	12.5	100	-	-
16	136	161	-	119	144	-	119	144	-	136	161	-	38	81	106	-	12.5	107	132	-
20	151	176	201	131	156	181	131	156	181	151	176	201	44	87	112	137	14.5	120	145	170
25	162	187	212	139.5	164.5	189.5	140	165	190	162	187	212	50	90	115	140	16	129	154	179
32	-	-	-	150	175	200	151	176	201	165	190	215	58	-	-	-	16.5	-	-	-
40	-	-	-	183	208	233	183	208	233	199	224	249	69	-	-	-	22	-	-	-

Bore size\Item	AE		B	C	D	DA	E	EA	EB	F	FA	G	GA	H	K	KA	M	MA	MB	P	PA	PB		R
Back cover	CA	U/R/CM																				CA	U/CM	
8	9.5	9.5	15	8	4	16	M4×0.7	10.5	12	7	2.2	17	6	-	4	10	M12×1.25	12	12	M5×0.8	7	5	5	17
10	9.5	9.5	15	8	4	16	M4×0.7	10.5	12	7	2.2	17	6	-	4	10	M12×1.25	12	12	M5×0.8	7	5	5	17
12	10.5	10.5	18	12	6	21	M6×1.0	14	16	10	5	22	6	5(2-Sides)	6	14	M16×1.5	17	17	M5×0.8	8	6	6	20
16	10.5	10.5	20	12	6	21	M6×1.0	14.5	16	10	5	22	6	5(2-Sides)	6	13	M16×1.5	17	17	M5×0.8	8	6	6	22
20	14.5	14.5	25	16	8	24	M8×1.25	18	20	12	6	29	7	6(2-Sides)	8	11	M22×1.5	20	20	1/8"	7.5	7.5	7.5	29
25	16	16	30	16	10	28	M10×1.25	20.5	22	17	6	29	7	8(4-Sides)	8	11	M22×1.5	22	22	1/8"	8	8	8	33.5
32	-	16.5	34.5	-	12	28	M10×1.25	17.5	20	17	6	36	7	10(4-Sides)	-	-	M30×1.5	30	14	1/8"	9	-	9	37.5
40	-	22	42.5	-	16	34	M12×1.25	21	24	17	7	46	8	14(4-Sides)	-	-	M38×1.5	35	16	1/4"	12	-	12	46.5

Remark: The dimensions of magnet type cylinder are the same as non-magnet type cylinder.

MID

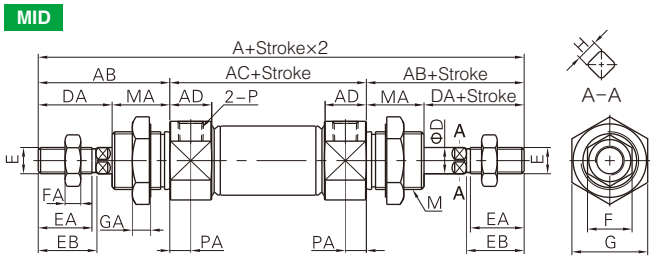

MIJ

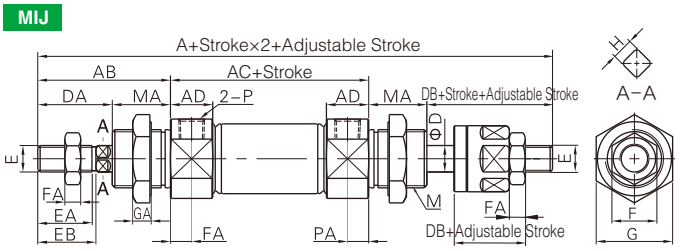

Bore size\Item	A(MID)	A(MIJ)	AB	AC	AD	D	DA	DB	E	EA	EB	F	FA	G	GA	H	M	MA	P	PA
8	104	103	28	48	11.5	4	16	15	M4×0.7	10.5	12	7	2.2	17	6	-	M12×1.25	12	M5×0.8	7
10	104	103	28	48	11.5	4	16	15	M4×0.7	10.5	12	7	2.2	17	6	-	M12×1.25	112	M5×0.8	7
12	128	128	38	52	12.5	6	21	21	M6×1.0	14	16	10	5	22	6	5(2-Sides)	M16×1.5	17	M5×0.8	8
16	134	134	38	58	12.5	6	21	21	M6×1.0	14.5	16	10	5	22	6	5(2-Sides)	M16×1.5	17	M5×0.8	8
20	150	151	44	62	14.5	8	24	25	M8×1.25	18	20	12	6	29	7	6(2-Sides)	M22×1.5	20	1/8"	7.5
25	165	164	50	65	16	10	28	27	M10×1.25	20	22	17	6	29	7	8(4-Sides)	M22×1.5	22	1/8"	8
32	184	183	58	68	16.5	12	28	27	M10×1.25	17.5	20	17	6	36	7	10(4-Sides)	M30×1.5	30	1/8"	9
40	227	222	69	89	22	16	34	29	M12×1.25	21	24	17	7	46	8	14(4-Sides)	M38×1.5	35	1/4"	12

Remark: The dimensions of magnet type cylinder are the same as non-magnet type cylinder.

MICD Φ16~Φ40

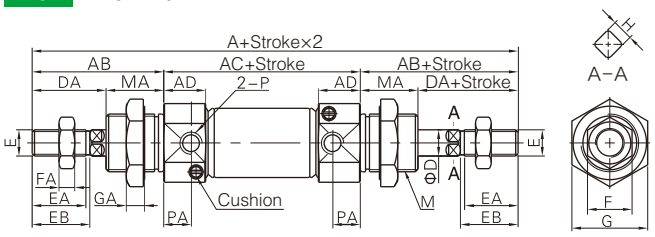

MICJ Φ16~Φ40

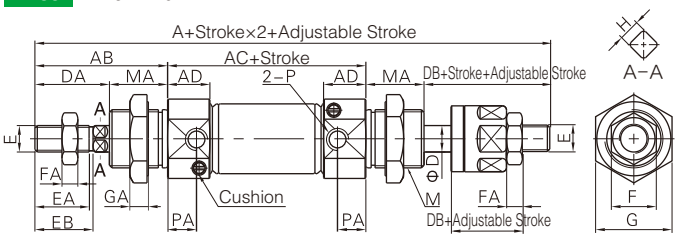

Bore size\Item	A(MICD)	A(MICJ)	AB	AC	AD	D	DA	DB	E	EA	EB	F	FA	G	GA	H	M	MA	P	PA
16	132.5	132.5	38	56.5	12.5	6	21	21	M6×1.0	14.5	16	10	5	22	6	5(2-Sides)	M16×1.5	17	M5×0.8	7.5
20	150	151	44	62	14.5	8	24	25	M8×1.25	18	20	12	6	29	7	6(2-Sides)	M22×1.5	20	1/8"	7.5
25	165	164	50	65	16	10	28	27	M10×1.25	20.5	22	17	6	29	7	8(4-Sides)	M22×1.5	22	1/8"	8
32	184	183	58	68	16.5	12	28	27	M10×1.25	17.5	20	17	6	36	7	10(4-Sides)	M30×1.5	30	1/8"	9
40	227	221	69	89	22	16	34	28	M12×1.25	21	24	17	7	46	8	14(4-Sides)	M38×1.5	35	1/4"	12

Remark: The dimensions of magnet type cylinder are the same as non-magnet type cylinder.

List for ordering code of accessories

Accessories	Mounting accessories				Knuckle				Sensor switch					
Bore size	LB	FA	SDB	TC	I	Y	F	U	CS1-M□	DS1-M□	CS1-F	DS1-F	CS1-U	DS1-U
8	F-MI10LB	F-MI8FA	F-MI8SDB	F-MI10TC	F-M4×070I	F-M4×070Y	F-M4×070F	F-M4×070U	CS1-M-S08	DS1-M-S08	CS1-F	DS1-F	CS1-U	DS1-U
10									CS1-M-S10	DS1-M-S10				
12	F-MI12LB	F-MI12FA	F-MI12SDB	F-MI12TC	F-M6×100I	F-M6×100Y	F-M6×100F	F-M6×100U	CS1-M-S12	DS1-M-S12				
16									CS1-M-S16	DS1-M-S16				
20	F-MI20LB	F-MI20FA	F-MI20SDB	F-MI20TC	F-M8×125I	F-M8×125Y	F-M8×125F	F-M8×125U	CS1-M-S20	DS1-M-S20				
25					F-M10×125I	F-M10×125Y	F-M10×125F	F-M10×125U	CS1-M-S25	DS1-M-S25				
32	F-MI32LB	-	F-MI32SDB	F-MI32TC					CS1-M-S32	DS1-M-S32				
40	F-MI40LB	-	F-MI40SDB	F-MI40TC	F-M12×125I	F-M12×125Y	F-M12×125F	F-M12×125U	CS1-M-S40	DS1-M-S40				

Accessory selection

Accessories		Mounting accessory				Knuckle				Sensor switch		
Cylinder model		LB	FA	SDB	TC	I	Y	U	F	C(D)S1-M	C(D)S1-F	C(D)S1-U
MI MIC	Standard	●	●	●	●	●	●	●	●	×	×	×
	With magnet	●	●	●	●	●	●	●	●	●	●	●
MSI MTI	Standard	●	●	●	●	●	●	●	●	×	×	×
	With magnet	●	●	●	●	●	●	●	●	●	●	●
MID MICD	Standard	●	●	●	×	●	●	●	●	×	×	×
	With magnet	●	●	●	×	●	●	●	●	●	●	●
MIJ MICJ	Standard	●	●	●	×	●	●	●	●	×	×	×
	With magnet	●	●	●	×	●	●	●	●	●	●	●

Material of accessories

Accessories	Mounting accessory				Knuckle			
Bore size	LB	FA	SDB	TC	I	Y	F	U
8~40	△	△	△	▲	□	□	□	□

▲——SUS304; △——SPCC; □——Carbon stee;