## Specification

| Model | 3R110-06 | 3R210-06 | 3R210-08 | 3R310-08 | 3R310-10 |
|---|---|---|---|---|---|
| Fluid | Air (to be filtered by 40 μm filter element) | | | | |
| Operating | Manual control direct acting type | | | | |
| Port size ① | PT1/8 | | PT1/4 | | PT3/8 |
| Orifice size | 12.0mm² (Cv=0.67) | 14.0mm² (Cv=0.78) | 16.0mm² (Cv=0.89) | 25.0mm² (Cv=1.39) | 30.0mm² (Cv=1.67) |
| Valve type | 3/2 Way | | | | |
| Lubrication ② | Not required | | | | |
| Pressure range | 0~1.0MPa(0~145psi) | | | | |
| Proof pressure | 1.5MPa(215psi) | | | | |
| Temperature | -20~70℃ | | | | |
| Material body | Aluminum alloy | | | | |

① PT thread, G thread and NPT thread are available.
② Once lubricated air is used, continue with same medium to optimise valve life span. It is suggested to use ISO VG32 lubricant or the oil with the same grade.

## Symbol

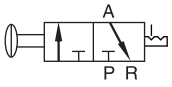


## Inner structure

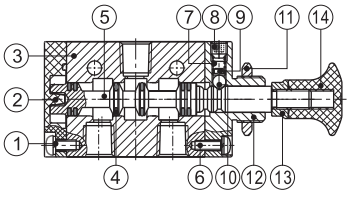


| No. | Item | No. | Item | No. | Item |
|---|---|---|---|---|---|
| 1 | Round head screw | 6 | Round head cover | 11 | Hexagon nut |
| 2 | Bottom cover | 7 | Spring | 12 | Top cover |
| 3 | Body | 8 | Stop screw | 13 | Safety nut |
| 4 | O-ring | 9 | Spring base | 14 | Hand grip |
| 5 | Spool | 10 | Steel ball | | |

## Ordering code

**3R 2 10 08 □**

**Model**

| | |
|---|---|
| 3R | 3 port 2 position push-pull valve |

**Code**

| | |
|---|---|
| 1 | 100 Series |
| 2 | 200 Series |
| 3 | 300 Series |

**Valve type**

| | |
|---|---|
| 10 | 2 position |

**Port size**

| Code | Port size | |
|---|---|---|
| 100 Series | 06 | 1/8" |
| 200 Series | 06 | 1/8" |
| | 08 | 1/4" |
| 300 Series | 08 | 1/4" |
| | 10 | 3/8" |

**Thread type**

| | |
|---|---|
| Blank | PT |
| G | G |
| T | NPT |

## Flow chart

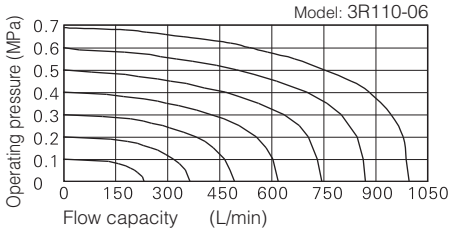


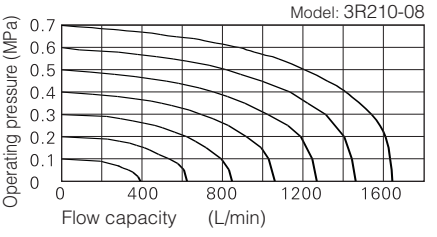


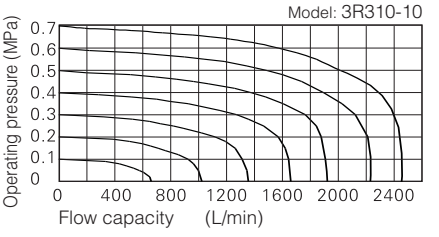


## Dimensions

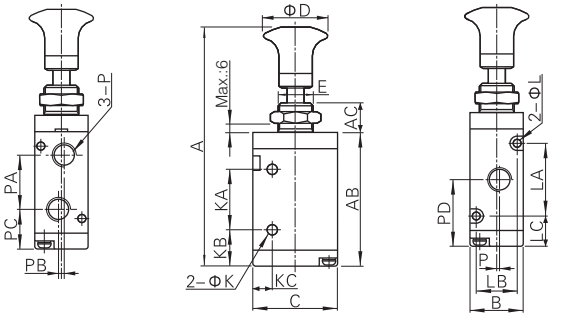


| Model\Item | A | AB | AC | B | C | D | E | K | KA | KB | KC | L | LA | LB | LC | P | PA | PB | PC | PD | PE |
|---|---|---|---|---|---|---|---|---|---|---|---|---|---|---|---|---|---|---|---|---|---|
| 3R110-06 | 87 | 47.8 | 10 | 18 | 27 | 25 | M12×0.75 | 3.1 | 21 | 13 | 7.7 | 3.3 | 19 | 13 | 14 | PT1/8 | 16 | 2 | 15.5 | 24.5 | 1 |
| 3R210-06 | 98 | 57.8 | 10 | 22 | 35 | 25 | M14×1.0 | 4.3 | 25 | 16 | 8 | 3.3 | 30 | 17 | 13.5 | PT1/8 | 22.5 | 0 | 17.5 | 28.5 | 0 |
| 3R210-08 | 98 | 57.8 | 10 | 22 | 35 | 25 | M14×1.0 | 4.3 | 25 | 16 | 8 | 3.3 | 30 | 17 | 13.5 | PT1/4 | 22.5 | 0 | 17.5 | 28.5 | 1.5 |
| 3R310-08 | 106.5 | 66.5 | 10 | 27 | 40 | 25 | M16×1.0 | 4.3 | 30 | 18 | 10 | 4.3 | 35 | 20 | 15.5 | PT1/4 | 24 | 0 | 21 | 33 | 0 |
| 3R310-10 | 106.5 | 66.5 | 10 | 27 | 40 | 25 | M16×1.0 | 4.3 | 30 | 18 | 10 | 4.3 | 35 | 20 | 15.5 | PT3/8 | 24 | 0 | 21 | 33 | 2 |